2024 Public Review of SGM-SF 2023

Consistent with plans relative to our continuous maintenance program, the latest publication of ANSI/AARST SGM-SF is being published for public review. Processes are still underway for repopulating the standing Radon Mitigation committee tasked with review and update of this standard. This public review is intended for collecting comments that will lead to improvements in upcoming publications.

ANSI/AARST standards are available for review and for purchase at www.standards.aarst.org. A link to ensure you receive future public review notices can be found at www.standards.aarst.org/public-review.

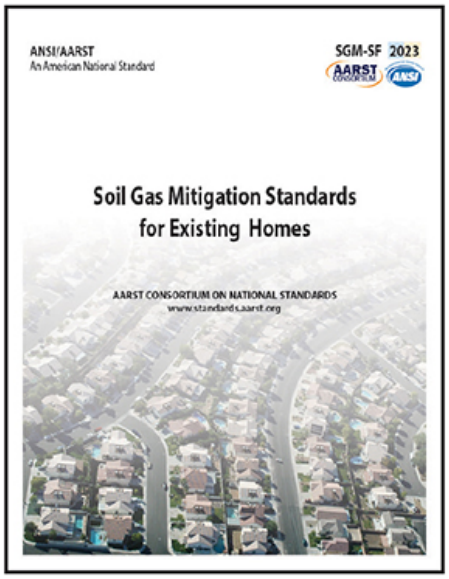

2024 Public Review: SGM-SF 2023

COMMENT DEADLINE: **August 5th, 2024**

REQUESTED PROCESS AND FORM FOR FORMAL PUBLIC REVIEW COMMENTS

Submittals (MS Word preferred) may be attached by email to StandardsAssist@gmail.com

1) Do not submit marked-up or highlighted copies of the entire document.

2) If a new provision is proposed, text of the proposed provision must be submitted in writing. If modification of a provision is proposed, the proposed text must be submitted utilizing the strikeout/underline format.

3) For substantiating statements: Be brief. Provide abstract of lengthy substantiation. (If appropriate, full text may be enclosed for project committee reference.)

REQUESTED FORMAT

Public Reviewed Item and Its Date: SGM-SF 2023

- **Name:** Affiliation:
- **Clause or Subclause**:
- **Comment/Recommendation**:
- **Substantiating Statements**:

Repeat the four bullet items above for each comment.

AARST Consortium on National Standards

Website: www.standards.aarst.org Email: StandardsAssist@gmail.com

527 N Justice Street, Hendersonville, NC 28739

The Consortium Consensus Process

The consensus process developed for the AARST Consortium on National Radon Standards and as accredited to meet essential requirements for American National Standards by the American National Standards Institute (ANSI) has been applied throughout the process of approving this document.

Continuous Maintenance

This standard is under continuous maintenance by the AARST Consortium on National Standards for which the Executive Stakeholder Committee has established a documented program for regular publication of addenda or revisions, including procedures for timely, documented, consensus action on requests for change to any part of the standard.

User Tools: User tools are posted online (www.standards.aarst.org/public-review) as they become available (such as templates for field notices, inspection forms, interpretations and approved addenda updates across time).

Notices

Notice of right to appeal: Bylaws for the AARST Consortium on National Standards are available at www.standards.aarst.org/public-review. Section 2.1 of Operating Procedures for Appeals (Appendix B) states, "Persons or representatives who have materially affected interests and who have been or will be adversely affected by any substantive or procedural action or inaction by AARST Consortium on National Standards committee(s), committee participant(s), or AARST have the right to appeal; (3.1) Appeals shall first be directed to the committee responsible for the action or inaction."

SGM-SF 2023 (w/Companion Guidance printed)

Table of Contents **Page**

Companion Guidance

Vapor Intrusion Companion Guidance

SGM-SF

Soil Gas Mitigation Standards for Existing Homes

1.0 SCOPE

1.1 This standard of practice specifies minimum requirements for methods that *mitigate* risks to occupants posed by the presence of *radon gas* and chemical vapors or gas in existing homes. This standard of practice is applicable to existing low-rise residential structures often classified as single-family structures and individual *dwellings* within a shared structure that contain no more than four attached *dwelling* units on a contiguous foundation.

1.2 Limitations

1.2.1 *Source materials*

This standard does not address practices associated with characterization, possession, handling, containment, generation, or disposal of radioactive or chemically contaminated materials.

1.2.2 *Mitigation methods*

This standard of practice addresses nearly all methods that reduce occupant exposure to *radon* or chemical vapors and gas in indoor air. However, it does not specify requirements related to removal or encapsulation of radioactive or chemical sources.

This standard does not specify requirements for practices related to:

a) removal of *radon gas* or chemicals from water or outdoor air;

b) biological or chemical methods that seek to neutralize toxicity of contaminated soil; and

c) soil vapor extraction (SVE), including contaminant capture and disposal methods.

Informative advisory—Active soil gas depressurization (ASD) methods prescribed in this standard *mitigate* occupant risk by preventing soil gas entry into occupied spaces. These designs need only address soil gas volumes that would otherwise intrude into a building. SVE designs that extract volatile organic compounds (VOC) mass from the soil are not designed to mitigate the current risk to occupants unless also demonstrating functional performance as required in Section 9 (Post-*mitigation*).

1.2.3 *Combustible gas*

This standard of practice does not address all practices that may be needed for *mitigation* of potentially combustible soil gases.

1.2.4 *Jurisdictional compliance*

This standard of practice does not contain all code or other requirements of the jurisdictions where the *mitigation* system is installed. Adherence to this standard does not guarantee or supersede compliance with the applicable codes or regulations of any federal, provincial, state, or local authority having jurisdiction.

1.2.5 *Safety*

This standard of practice is not intended to address all safety concerns associated with its use. It is the responsibility of the user of this standard to establish appropriate health and safety practices, and to determine the applicability of regulatory limitations prior to use of this standard.

1.2.6 *Design and warranties*

This standard of practice is not a complete design manual. Compliance with its provisions will not guarantee reduction of indoor radon or soil gas to any specific concentration.

2.0 APPLICABILITY

2.1 Mandatory Conventions

The terms "shall," "required" and "normative" indicate provisions herein that are considered mandatory. Terms such as "should," or "recommended" and provisions prefaced by the term "Note" or "Informative" indicate provisions that may be helpful or good practice, but which are not mandatory.

2.2 Prior Systems

This standard shall not apply to radon or soil gas mitigation systems installed prior to its effective date, except for:

a) portions of a previously installed system that are altered. For the purposes of this standard, altering a radon or soil gas mitigation system does not include incidental repair, such as replacing worn out fans or other equipment with equivalent components, while leaving the remainder of the system unchanged; and

b) portions of a previously installed system that are not compliant with Section 6.4 (*ASD* Exhaust Discharge) and Section 6.5.2 (Safe fan locations).

Details of incidental repairs and system alterations shall be documented in jobsite logs for each event.

2.3 Use

To the extent requirements of this document exceed local, state, provincial or federal requirements for the locale in which the *mitigation* is conducted, requirements in this document shall be followed.

3.0 QUALIFIED CONTRACTORS

3.1 Contractors, Teams, and Qualifications

The term "*Contractor*" within this standard shall refer to persons, individuals, or firms, regardless of the organizational structure of the entity, which engage in mitigating occupant risk from *radon gas* or chemical vapors and other soil gases that are present in indoor air.

To be considered qualified, the *contractor*, contracting team, or management team shall include at least one *"qualified mitigation professional"* as defined by:

a) Section 3.2, where mitigating occupant exposure to *radon* gas; and

b) Section 3.3, where mitigating occupant exposure to chemical vapors or other soil gases.

3.2 Radon Mitigation Professionals

A *"qualified radon mitigation professional"* is defined as:

"An individual who has demonstrated a minimum degree of appropriate technical knowledge and skills specific to design and installation of systems that mitigate occupant exposure to *radon gas* in existing homes as established in certification requirements of:

a) a national program that is compliant with requirements in Section 13.1; and

b) as required by local statute, state or provincial licensure or certification programs that evaluate individuals for radon-specific technical knowledge and skills."

3.2.1 *Responsibilities*

Responsibilities for *qualified* ***radon*** *mitigation professionals* shall include compliance with all provisions in this standard except where identified within a provision as specific to only *mitigation* of chemical vapors or other soil gases.

3.3 Soil Gas Mitigation Professionals

A *"qualified soil gas mitigation professional" is* defined as:

"An individual who has demonstrated a minimum degree of appropriate technical knowledge and skills specific to design and installation of systems that mitigate occupant exposure to hazardous chemicals vapors and gas in existing homes as established in listing or certification requirements of:

a) a national program that is compliant with requirements in Section 13.1; and

b) as required by local statute, state or provincial licensure or certification programs that evaluate individuals for soil-gas-specific technical knowledge and skills."

3.3.1 *Responsibilities*

Responsibilities for *qualified* ***soil-gas*** *mitigation professionals* shall include compliance with all provisions in this standard except where identified within a provision as specific to only *mitigation* of radon gas.

3.4 Quality Management

Qualified mitigation professionals shall establish, maintain, and follow a written quality management program.

Informative Figure 3.4 Quality Management

Continuous Goals:

a) *The Quality Objectives.* Mitigation designs that reduce concentrations attributable to soil gas hazards to below the target action levels, while aspiring to minimize known soil gas hazards; and

b) *Physical Quality.* Mitigation systems that are compliant with standards, codes, and statutes, while aspiring to achieve customer satisfaction.

Plan
Implement policies and procedures designed to meet quality goals.

Track successes and failures
Input: Identify items to track that will help gauge if you are meeting quality goals.

Take action to improve
Make changes in policies and procedures to better meet quality goals.

Review successes and failures
Output: Review tracked items for causes of failure in meeting quality goals.

3.4.1 *Quality management programs*

Note

Quality management programs shall include:

a) a means to track jobsite details relative to the scope of services the *mitigation contractor* provides, to address important tasks based on commitments to quality goals; and

b) retain records of training and experience for all staff members who participate in physical installation of *mitigation* system(s).

3.4.2 *Quality control oversight*

The quality management program shall identify individuals, as authorized by the *qualified mitigation professional(s)* and as permitted by statute, state licensure or certification program, who are responsible for *mitigation* activities in accordance with requirements in a) and b) of this Section 3.4.2.

a) Quality of *mitigation* design
Program records shall include currently valid certifications/licenses for persons identified as *qualified mitigation professionals*, in accordance Sections 3.2 or 3.3, who are to be responsible for the quality of *mitigation* design and effectiveness.

b) Oversight of jobsite activities
For quality management programs that allow subordinate *qualified professionals* or journey level installers to oversee various jobsite activities while working under the responsible charge of a *qualified mitigation professional*, oversight duties shall not be authorized until quality management records include:

1. The identity of the installer and scope of their oversight authority, to include authorization to temporarily stop work if quality or safety is being compromised; and
2. Currently valid certifications/licenses, related experience, and educational benchmarks, as established by authorities identified in Sections 3.2 or 3.3, that demonstrate a minimum degree of technical knowledge and skills specific to the tasks being conducted.

3.4.3 *Jobsite records*

Quality control (QC) records, specific to each individual *mitigation* effort and system design, installation, and modification, shall be retained in jobsite tracking forms, logs, diagrams or photographs that include:

a) details desired by the *contractor* for tracking quality and those otherwise required in this standard;
b) solutions derived during design or installation that are custom to the building and not the same basic design feature for every building;
c) the identity of the *qualified mitigation professional* responsible for design and effectiveness; and
d) the identity of the *qualified mitigation professional* or authorized journey level installer physically present at each jobsite event who is responsible for quality oversight of the event.

3.4.4 *Managing quality*

The quality management program shall include a written commitment to quality goals and identify a *qualified mitigation professional* who, in coordination with management, is responsible to:

a. update ongoing program changes they deem necessary to better meet quality goals, and
b. review QC records and efforts to improve *quality control* at least annually to ensure program changes are updated, effective, documented and disseminated to affected staff members.
Note—See https://www.iso-9001-checklist.co.uk/9.3-management-review.htm

4.0 GENERAL PRACTICES

4.1 Assemble Building Information

Prior to providing proposals, the *contractor* shall obtain or attempt to obtain information that includes:

a) The objective of the *mitigation*, be it *radon gas*, *chemicals of concern (COCs)*, flammable gas or proactive *mitigation* efforts due to suspected hazards;
b) The results of any *radon* measurements or measurements of *chemicals of concern* with information relative to action levels, toxicology, site classification and any other concurrent remedial actions. Measurement results and any related information shall be recorded and retained in jobsite records;
c) Building details regarding design and construction practices for each attached foundation area. The approximate age of the building or portion of the building targeted for *mitigation* shall be determined and recorded in jobsite records; and
d) Any *diagnostic* procedures and measurements that have been conducted for each building or the common portion(s) of the building(s) to be mitigated.

4.1.1 *Insufficient data*

The *contractor* shall advise the *client* in writing when additional testing or diagnostics are required to characterize dynamics of *radon* or soil gas entry into the building, particularly as it relates to capacity for either:

a) design of appropriate *mitigation* system(s); or
b) protection for all occupants of the building.

When extenuating circumstances warrant immediate action, the *contractor* is permitted however to proceed with *mitigation designs* and installations.

4.1.2 *Diagnostic proposals*

The *contractor* shall advise the *client* in writing when *diagnostic procedures* are required prior to *mitigation* system installation.

4.2 Proposals

Contractors shall provide *clients* the following written information prior to initiation of the work:

a) The Qualified Mitigation Professional's name, address and phone number; relevant *radon* or soil gas *mitigation* certification and/or licensing number; and signature (manual or electronic in conformance with the Electronic Signatures in Global and National Commerce [E-SIGN] Act);
b) A description of the proposed *mitigation* system(s) and the elements of the applicable plan for long-term *operation, maintenance, and monitoring (OM&M);*
c) A statement that describes options for initial post-*mitigation* testing, including the option of third-party testing;
d) The conditions of a warranty concerning workmanship and defects in materials;
e) A statement on whether the *contractor* guarantees that the proposed system(s) will or will not reduce *radon* or soil gas concentrations below a specified threshold and conditions or limitations of the guarantee; and
f) Any other limitations that the *contractor* places on the scope of work and any limitations on professional obligations.

4.2.1 *Non-ASD designs*

As required in Section 12.1.4, *contractors* shall provide *clients* an estimate of total ownership costs including installation and annual operating costs where proposed designs include Indoor Air Pressurization, Indoor Air Dilution and Soil Air Dilution *mitigation* methods.

4.3 Notification and Hazards

4.3.1 *Owner occupied—Ventilation*

The *contractor* shall inform the *client*, prior to starting work, of the need to ventilate work areas during and after the use of sealants, caulks or bonding chemicals containing volatile solvents.

4.3.1.1 Leaving Notices

Note—Leaving sealant hazard notices, such as provided in Exhibit A, is recommended for most all jobsites.

4.3.2 *Not owner occupied*

Where occupants are not the property owner, the *contractor* shall request that the *client(s)* provide notices to occupants no less than 24 hours before entering the building, to include instructions, warnings, or guidance for disruptive or hazardous situations, as required in Section 4.3.2 of ANSI/AARST SGM-MFLB (Soil Gas Mitigation in Existing Multifamily, School, Commercial and Mixed-Use Buildings).

4.3.3 *Material safety data sheets (SDS)*

Upon request, the *contractor* shall provide *clients* the published safety data sheets for materials used.

4.4 Jurisdictional Authorities

4.4.1 *Jurisdictions*

The *contractor* shall comply with all applicable testing, *mitigation* and reporting requirements issued by the federal, provincial, tribal, state, or local jurisdiction that apply to the contract where the *mitigation* is being performed.

4.4.2 *Local jurisdictions (informative)*

Radon—Information to locate State Radon Offices in the United States can be found at https://www.epa.gov/radon/epa-map-radon-zones-and-supplemental-information#datainfo

Vapor Intrusion—Information to locate State Offices in the United States can be found at https://itrcweb.org/membership/state-engagement

4.4.3 *Building codes, licenses, and permits*

All components of the *mitigation* work shall comply with applicable mechanical, electrical, building, plumbing, energy and fire prevention codes, utility company requirements, and any other regulations of the jurisdiction having authority (JHA) where the work is performed. For localities having no relevant code requirements, the most recent version of nationally published codes shall be observed. Licenses and permits required by the JHA shall be obtained.

5.0 SYSTEM DESIGN

5.1 Appropriate Systems

5.1.1 *General principles*

In judging appropriate characteristics of a *mitigation* system or method, considerations such as the following shall be evaluated.

a) Safety
The *mitigation* system shall not create health or safety hazards. The building shall not be altered such that the building becomes less safe than its existing condition, to include, but not limited to, maintaining the existing level of fire protection and level of protection provided by means of egress.

b) Accessibility
Equipment installed that requires routine inspection and maintenance, such as fans, system controls and system monitors, shall be installed in a location *accessible* to individuals responsible for system maintenance without destructive or significant disassembly of building components or finishes.

c) Durability
Materials or methods not specified herein that are used in *mitigation* efforts should be capable of retaining functional integrity for the life of the system. Serviceable mechanical and control equipment should have designed life spans that are comparable to other similar mechanical system equipment.

d) Unnecessary Noise
Choices and actions that minimize objectionable *unnecessary noise* should be part of design and installation for each system. Where noise is both objectionable and unnecessary, actions should be taken to reduce *unnecessary noise* to the extent practicable. *Unnecessary noise* shall be defined as noise generated by system vibration or air rushing sounds at air intakes or exhausts that can be reduced by:

1. Reducing the transfer of vibration from system components that come in contact with building materials; or
2. Reducing air velocity at the point of exhaust or at air intakes, such as those within non-habitable spaces or under membranes.

Note

5.1.2 *Other building systems*

The *mitigation* system shall not:

a) compromise the functionality of mechanical, groundwater control or drainage systems;

b) compromise the functional integrity of roofs, guttering, siding or other structural systems;

c) obstruct doorways or operable windows; and

d) obstruct accessibility to switches, controls, electrical service panels or junction boxes and other equipment, such as HVAC components, which require maintenance over time.

5.1.3 *Permanent systems required*

Mitigation systems shall be designed and installed as an integral, permanent addition to the building. Time limits on use of temporary *mitigation* efforts, including for uncontrollable logistics or rapid response situations, shall comply with Section 13.2 in the latest publication of ANSI/AARST SGM-MFLB.

5.1.4 *Collateral mitigation*

Where a *mitigation* system impacts or might impact adjoining *dwellings* or units in a shared building, *contractors* shall:

a) provide disclosures, in accordance with Section 10.6, where a *mitigation* system might result in *inadvertent collateral mitigation*; and

b) comply with Section 13.3 in the latest publication of ANSI/AARST SGM-MFLB when designing *intentional collateral mitigation*.

5.2 Nondestructive Investigation

An investigation of the common building structure(s) shall be conducted prior to initiating *mitigation* work. The investigation shall include visual inspection of both the exterior and interior of the building(s) in accordance with Section 5.2.2. Jobsite logs shall include the date and identity of the person conducting the inspections and resulting observations noted on diagrams or in jobsite logs. **Note**

5.2.1 *Diagrams*

Diagrams shall be created and retained in jobsite logs that comply with a) and b) of this Section 5.2.1.

a) Foundation Types and Sizes
A diagram or sketch shall be created that portrays the relative size of each building foundation component of the shared foundation system. The diagram shall identify each attached slab-on-grade, basement, and *crawl space* foundation area, including additions to the original building and attached garages.

Figure 5.2.1

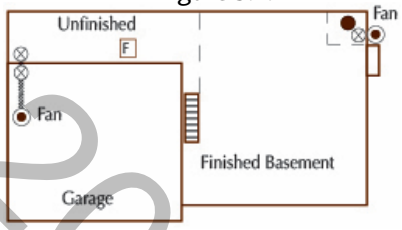

b) Multiple Test Locations
Where *radon* or soil gas measurements have been conducted in multiple *ground-contact* rooms, *dwellings* or non-residential rooms or units, at least one diagram or sketch shall illustrate available test results and their general location. **Note**

5.2.2 *Visual inspections*

5.2.2.1 Exterior Visual Inspection

An exterior visual inspection shall be conducted that includes all exterior faces of the building, as viewed while standing outside the structure. Jobsite logs shall include:

a) **Foundation Walls.** Notation of foundation wall construction type(s), such as poured concrete, stone, and block (CMU); and

b) **Elevations.** Notation portraying the general height of the building above grade and relative elevation of each attached upper foundation floor compared to the lowest foundation slab or earthen floor.

Where observing air pathways or air handling systems that could hinder or aid effective *mitigation*, as described in Table 5.2.2.1, the conditions observed shall be noted in jobsite logs.

Table 5.2.2.1 Examples of air pathways or systems that could hinder or aid effective *mitigation*	
Between indoors and outdoors	Air intakes, exhaust locations and other openings between indoor and outdoor air that, based on their size, could influence a buildings air exchange rate, air pressures or energy consumption.
Between soil and outdoors	Air pathways between soil and outdoor air that, based on their size and location, could represent problems in achieving *ASD* effectiveness
Between soil and indoors	Exterior soil, drain tiles or enclosed spaces over soil that, depending on the total air volume leakage of adjoining interior walls, could need a custom solution

Note

5.2.2.2 Interior Visual Inspection

The interior visual inspection shall be conducted to include all ground-contact rooms. Diagrams, sketches or as otherwise recorded in jobsite logs, shall also include components identified in Table 5.2.2.2.

Table 5.2.2.2		Interior Inspection Components
a)	Foundation walls	Notation, where different from exterior inspections, regarding poured concrete, stone, block (CMU) or other wall foundation material(s)
		Load bearing assemblies, such as masonry partitions, and as associated with unique foundation designs
b)	Rooms	A general floor plan layout of room partitions that also denotes finished areas and open earth crawlspaces
c)	Mechanical systems	The location of furnaces, air handlers, boilers and water heaters
		Locations of any ductwork under slabs
d)	Openings to soil	Both observed sizable openings between soil and indoor air and suspected openings, such as under bathrooms or utility access points **Note**
e)	Water drainage	Observations regarding water control systems
	1. Sumps	The location and nature of openings to soil within any pits **Note**
	2. Surface Water Drainage	Presence or absence of drainage systems for surface water on floors or walls
		Drains or drain systems that drain directly to soil or grey water piping **Note**
f)	Safety concerns	Observed conditions that pose safety concerns to workers/occupants **Note**
	1. Fire ratings	Observance of fire-rated assemblies or separation required (including for fire-rated walls and fire-rated ceiling and floor assemblies)

Note

Exception—Jobsite logs shall be updated with pertinent findings during *mitigation* processes where components listed for identification in Tables 5.2.2.1 and 5.2.2.2 were obscured, inaccessible for visual review, or later found to have been inadvertently overlooked during the visual inspection.

5.2.2.3 Chemically Contaminated Water

Where the purpose of the *mitigation* includes chemical vapor intrusion, the *contractor* shall document and provide timely notice to the *client* regarding components identified in Table 5.2.2.3.

	Table 5.2.2.3	Chemically Contaminated Water
a)	Sumps/Pits	Observance of sumps or pits that are open to soil
		If closed and the nature of sump lids or pit covers
		If the pit receives surface water from floors or walls
		The destination of water drained or discharged by pumps
b)	Water Intrusion	Presence of ground water on the surface of floors or walls

5.2.3 *Reporting unexpected conditions*

The *contractor* shall provide the *client* timely notice of suspected or unexpected conditions revealed during visual investigations, *diagnostics* or installation that can significantly impact occupant health, budgets, schedules, or other concerns relative to the scope of work. The *contractor* shall document and provide immediate or timely notice to the *client* regarding:

a) hazardous materials or conditions observed but not previously identified by the *client*; and

b) observations of failed or deficient water control systems, to include observance of standing water in a basement or *crawl space*; evidence of groundwater intrusion; and failed pumps or *sump* systems and any pipes that inappropriately discharge or leak contaminants.

5.3 Diagnostic investigation

5.3.1 *All mitigation methods*

Where the purpose of *mitigation* includes chemical vapor intrusion and for *mitigation* of multifamily, school, commercial or mixed-use buildings, *diagnostic* analysis shall be conducted prior to final design and installation.

5.3.2 *Targeted focus (all methods)*

The initial target of design and *diagnostic* investigations shall prioritize locations that would *mitigate* occupant exposure to the largest volume of soil gas that is susceptible to migrate into the building.

Exceptions: Where it has been determined that a foundation area is a source of disproportionately more concentrated volumes of radon, chemical vapors, or flammable gas; or where it has been determined that soil gas is not the source of the hazard.

5.3.1.1 Target Limits

It is not required that *diagnostic procedures* or *mitigation* methods be applied to all *ground-contact* portions of a building. The percentage of area targeted for *mitigation* compared to size the full building footprint shall be recorded in jobsite logs or identifiable in jobsite diagrams. *Diagnostic* characterizations shall not be reported as being homogenous across any other individual foundation or building area unless verified.

5.3.3 *Diagnostic and performance test conditions*

Jobsite logs shall include outdoor temperature and the status of heating, cooling, or mixed HVAC operating conditions, at the time when conducting *diagnostic* or performance test measurements. Jobsite logs shall also indicate whether this testing was conducted, as is recommended:

a) with all exterior windows and doors, including garage doors, closed; and

b) with normal occupied indoor temperatures of between 65˚and 80˚ F (18˚ - 27˚ C).

5.3.4 *Non-ASD methods*

All non-*ASD* systems, methods and *diagnostic procedures* shall comply with Section 12 of ANSI/AARST SGM-MFLB. Where installing *ASD* style systems with an inverted fan to pressurize rather than depressurize soil air, the design shall comply with ANSI/AARST SGM-MFLB, Section 12.4 *(Soil Air Pressurization)*.

5.3.5 *ASD diagnostic PFE analysis*

Where required before or during installation, *PFE analysis* shall include evaluations required in a), b) and c) of this Section 5.3.5.

a. *PFE* Distance (Qualitative)

With vacuum applied at the chosen suction point, evidence shall be sought to characterize the distance *PFE* can be achieved across the targeted *soil gas collection plenum(s)*. The pilot hole or test port locations shall be at locations that will best characterize:

1. the full expanse of the targeted *soil gas collection plenum(s);* or
2. as an alternative or supplement, other locations where evidence suggests that large volumes of soil gas are susceptible to being drawn into the building by air pressure differences between soil and indoor air.

Where *PFE* is not demonstrated across most of the targeted *soil gas collection plenum(s),* further investigation is required.

b. *PFE* Vacuum (Quantitative)

Once goals for *PFE* distance are achieved, measurements shall be made to quantify air pressure differences under the slab or membrane relative to indoor air. Jobsite logs shall include the values measured in this effort to characterize vacuum strength needed for *ASD* design. The measurements shall be made with a micromanometer or equivalent differential pressure gauge that is capable of reading to 1/1000-inch water column (0.25 Pa). **Note**

c. Exhaust Air Volume (Quantitative)

Once goals for both *PFE* distance and vacuum strength are met, the volume of air exhausted to achieve desired *PFE*, as measured in *cfm* (m^3/min), shall be recorded in jobsite logs. Fans chosen and duct pipe configurations, compliant with Section 6.3, shall be capable of transporting this volume of air. **Note**

5.3.5.1 Exception

Where *PFE* test locations or test ports cannot be created due to building materials that are virtually irreplaceable, such as for historical preservation properties, or due to denied access to locations of interest. To exercise this exception, jobsite logs shall include the reason why and alternative locations or methods used for verifying design effectiveness.

5.4 Seasonal Compensation

Jobsite logs shall confirm that a comparison was made between:

a) *diagnostic* test conditions, as recorded for compliance with Section 5.3.3, and
b) the normal occupied building operating condition that prevails during the greatest amount of time each year for local buildings, as illustrated in Figure 5.5 b (*Seasonal Compensation*).

5.4.1 *Vapor intrusion*

Because it is not possible to predict worst case conditions based on a single measurement or *diagnostic* event, it shall be recommended to *clients* that designs address a means consistently monitor if the system is meeting *mitigation* goals where assessments or indoor measurements indicate chemical vapor or other hazardous gas pose *acute* or *subchronic* risks.

5.5 Decisions (informative)

The following flowcharts illustrate sample procedures for determining the appropriate design choices.

Figure 5.5-a **ASD Method—Example Decision Flowchart**

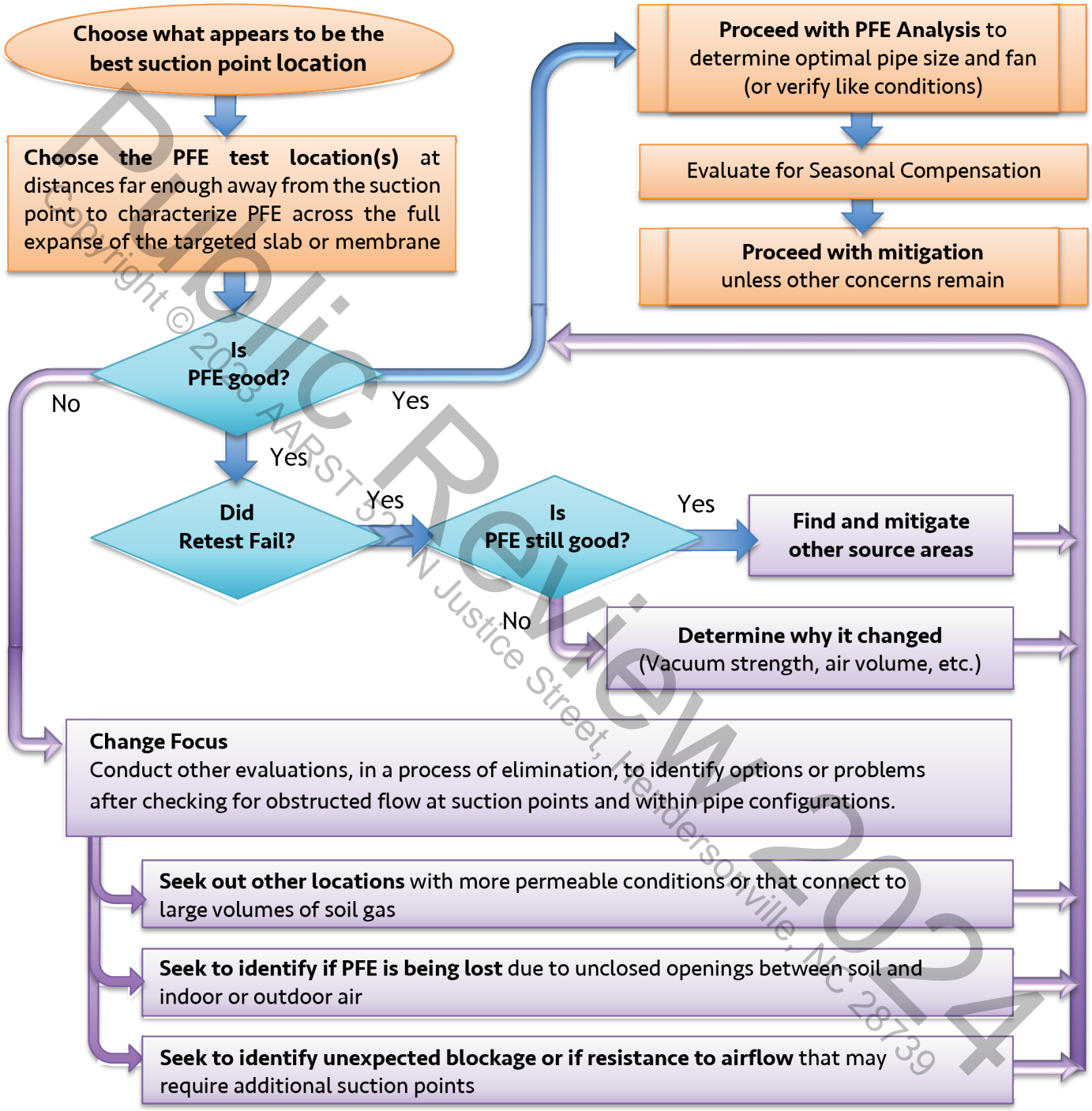

Process of Elimination — **Note**

Understanding Permeability — **Note**

Visual Indications of Permeability — **Note**

Suction Pit Size — **Note**

Figure 5.5-b **Seasonal Consideration (Climate Zone)**

Informative advisory—While estimates can be made, it is not possible to predict worst case conditions based on a single *diagnostic* event or measurement. To know, one must test under the condition of concern.

	Zone 8 Subarctic	Zone 7 Very Cold	Zone 6 Cold	Zone 5 Cool	Zone 4 Mixed	Zone 3 Warm	Zone 2 Hot	Zone 1 Very Hot	Acutely Hot
	Fairbanks	*Caribou ME* *Quebec* *Marquette MI* *Duluth MN* *Winnipeg* *Grand Forks* *Anchorage* *Breckenridge* *Aspen*	*Portland ME* *Buffalo NY* *Burlington NH* *Milwaukee* *Minneapolis* *Bismarck ND* *Pierre SD* *Cheyenne WY* *Billings MT* *Helena MT*	*Boston* *Albany NY* *Pittsburgh PA* *Cleveland* *Indianapolis* *Chicago* *Omaha* *Denver* *Albuquerque* *Salt Lake* *Reno, NV* *Boise, ID*	*New York, NY* *Philadelphia* *Richmond, VA* *Baltimore* *Louisville* *Cincinnati* *Nashville* *Saint Louis* *Kansas City* *Amarillo TX* *Portland, OR* *Seattle*	*Atlanta* *Charlotte, SC* *Birmingham AL* *Jackson, MS* *Memphis* *Little Rock* *Dallas* *Austin* *Las Vegas* *San Francisco* *Los Angeles* *San Diego*	*Melbourne, FL* *Tampa, FL* *Mobile, AL* *New Orleans* *Houston* *Brownsville* *Phoenix* *Tucson*	*Miami, FL* *Puerto Rico* *Virgin Islands* *Honolulu* *Guam*	*Certain Asiatic Regions*
				Annual Average Outdoor Temperatures					
	27 F (-3 C)	**39 F** (4 C)	**45 F** (7 C)	**49 F** (9 C)	**55 F** (13 C)	**62 F** (17 C)	**69 F** (21 C)	**76 F** (24 C)	**83 F** (28 C)
% of year	100%	83%	75%	75%	66%	58%	42%	50%	100%
Heating	< Freezing						16%		
Cooling						16%	42%	50%	
Neither		16%	25%	25%	16%	25%			
Avg. Low Winter Temps	**Zone 8**	**Zone 7**	**Zone 6**	**Zone 5**	**Zone 4**	**Zone 3**	**Zone 2**	**Zone 1**	**Acute**
	Dec/Jan/Feb	*Dec/Jan/Feb*	*Dec/Jan/Feb*	*Dec/Jan/Feb*	*Dec/Jan/Feb*	*Dec/Jan/Feb*	*Dec/Jan/Feb*	*Dec/Jan/Feb*	*Dec/Jan/Feb*
	-6 F (-21 C)	**2 F** (-17 C)	**9 F** (-12 C)	**17 F** (-8 C)	**26 F** (-3 C)	**35 F** (2 C)	**45 F** (7 C)	**61 F** (16 C)	**76 F** (24 C)

Climate zone temperatures based 30-year averages published online (e.g., the National Centers for Environmental Information-NOAA) for a major city located within each climate zone. Zone classifications reflect ASHRAE standards 90.1 / 90.2 (The American Society of Heating, Refrigerating and Air-Conditioning Engineers) https://www.ashrae.org

Seasonal Compensation — **Note**

6.0 ACTIVE SOIL DEPRESSURIZATION (ASD)

6.1 *ASD* Suction Points

6.1.1 *Suction pits*

A cleared void space shall exist or be created below all suction points through slab floors and to the side of all *suction points* through walls unless excavation is not practicable. This cleared void space shall be not less than 0.25 ft^3 (7 dm^3) which equates to 2.0 US gallons (8 L) of excavated sub-slab soil/aggregate.

Exception: Where multiple *suction points* are employed, secondary suction pits designed for condensate drainage or airflow balance are permitted to have a smaller cleared void space.

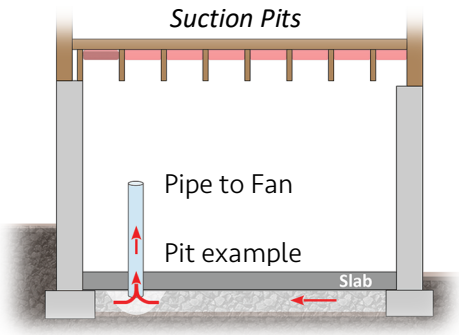

Note

6.1.1.1 Seal the Suction Point

Gaps in concrete surrounding suction pipes shall be sealed in a permanent, airtight manner.

When using caulk, the gap opening shall be cleaned and then sealed with caulk complying with ASTM standard C920 class 25 or greater.

To support caulk while it cures, gap openings greater than 1/2 inch (13 mm) in width shall be pre-filled with foam *backer rod* or comparable material prior to applying caulk.

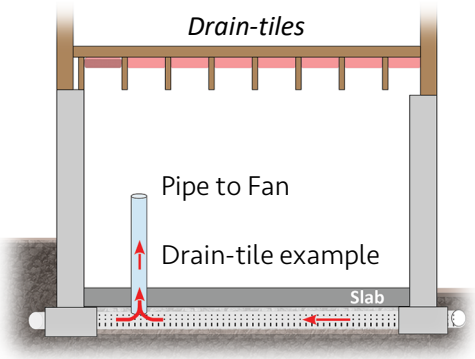

6.1.1.2 Drain-tile Suction

Where the *suction pit* or suction piping directly accesses soil air from a drain-tile, the configuration shall not result in compromising the capacity of the water drainage system.

6.1.2 *Sumps*

6.1.2.1 Seal the Suction Point (sumps)

Where *sumps* are used as a *suction point*, *sump* lids shall be sealed in accordance with Section 7.5 in an airtight manner.

Note

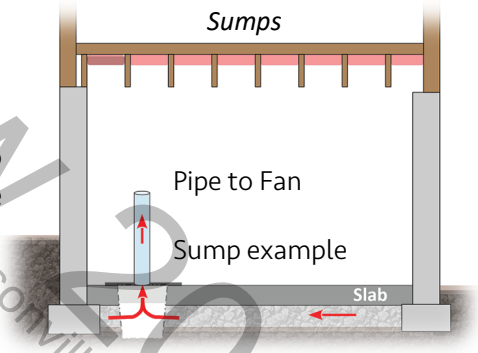

6.1.2.2 Accessibility to Sumps

Provisions of Section 7.5 for sealing *sumps* shall be observed to include that a physical access port or equivalent is required. Flexible coupling disconnects for suction piping, as specified in Section 6.2.6, shall be provided to ease *sump* lid removal.

6.1.2.3 Labels Required (sumps)

Sump lids shall be labeled in accordance with Section 8.4.6 a.

Note

6.1.3 *Sub-membrane suction points*

For sub-membrane *depressurization* (SMD), suction pipe ducting shall extend under the *soil gas retarder* membrane and shall be installed to prevent obstruction of air volume flow at the air inlet opening(s) of the suction pipe(s). The suction pipe inlet configuration shall be made open to soil air in a manner that allows *PFE* under the entire expanse of the membrane.

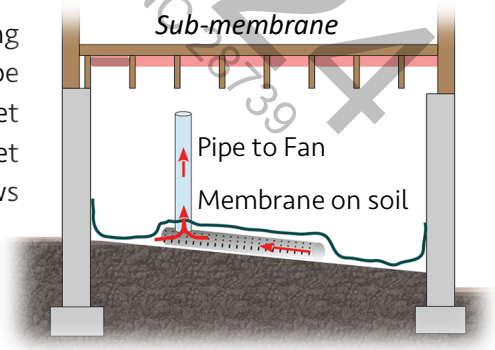

6.1.3.1 Seal the Suction Point (membranes)

The opening around penetrations of a *soil gas retarder* shall be sealed in a permanent, airtight manner. Appropriate sealant

Note

materials shall be applied for *ASD* duct piping and other utility pipe penetrations through the membrane such as gasket fittings, pipe clamps, roof flashing or an appropriate sealant.

6.1.3.2 Seal the Membrane(s)

The soil gas retarder installed in accordance with Sections 7.6 and 7.7. The *soil gas retarder*, including seams and edges, shall be sealed to resist air movement between soil and the air above the membrane.

6.1.3.3 Labeling Required (membranes or access ports)

Membranes or *crawl space* access locations shall be labeled in accordance with Section 8.4.6 b.

6.1.4 *Non-habitable air spaces*

Note

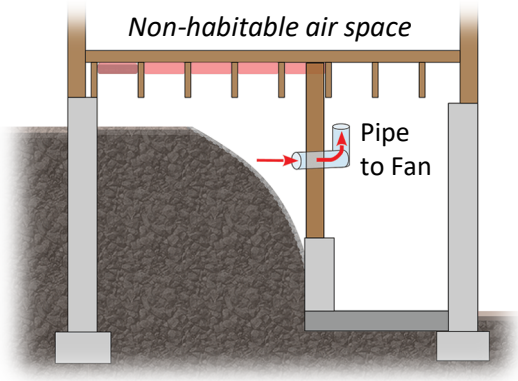

6.1.4.1 Sealing Non-habitable Air Spaces

When depressurizing a non-habitable airspace, all surfaces of the non-habitable airspace that border both indoor and outside air shall be sealed in accordance with Section 7.9 *(Sealed Isolation Assemblies)*.

6.1.4.2 Restricted Use

The resulting system shall not cause the structure to become unsafe or adversely affect the performance of the building to include:

a) Adverse impacts to building systems (with the most notable being *flue gas spillage* from atmospherically vented combustion appliances located elsewhere in the building); and

b) Excessive energy penalties and damage to building components (with the most notable being hot, cold and humid outside air drawn into a *non-habitable airspace* by the *mitigation system*).

Depressurization of non-*habitable airspaces* shall not be used where:

a) atmospherically vented combustion appliances are installed within the airspace to be depressurized;

b) isolation cannot be created to resist air movement between the *non-habitable airspace* and surrounding airspaces containing one or more atmospherically vented combustion appliances. Resulting configurations shall not induce *flue gas spillage* described in Section 11.2.2; and

c) the extent of inaccessible openings between the isolated space and both interior and exterior areas surrounding the isolated space has not been evaluated and accounted for in system design and installation.

Crawl space depressurization is only allowed where an area cannot be safely accessed or has insufficient height to work in.

Note

6.1.4.3 Safety Requirements (non-habitable airspaces)

Where entry into a non-habitable air space being depressurized might occur in the future for maintenance or other reason, precautionary safety features are required to prevent exposures to excessive radon or chemical vapor exposure that can result within the depressurized airspace. Safety features shall include:

a) Access ports to non-habitable air spaces shall be labeled in accordance with Section 8.4.6 c to provide warning and instructions, such as for ventilating the airspace prior entry or as warranted, other precautions and instructions;

b) Doors and access port hatches that can be opened without the use of tools shall be provided hardware to facilitate adding a lock to prevent incidental entry; and

c) Fan monitors required in accordance with Section 8.2 shall be located where they can be accessed without entering the depressurized non-habitable air space.

6.1.5 *Block walls*

6.1.5.1 Suction Pipe Locations

Note—Suction pipe locations for Block Wall *Depressurization* will depend on the configuration of the hollow void network(s) within walls to be depressurized and the ability to close openings that surround the void network(s).

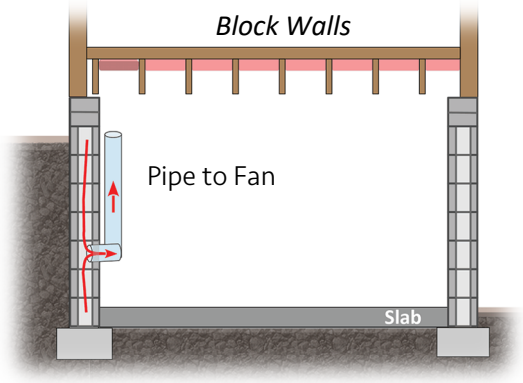

Note

6.1.5.2 Sealing (block walls)

For Block Wall *Depressurization*, all *accessible* openings and gaps in the wall that surround the hollow void network being depressurized shall be closed in accordance with Section 7.4.1 to resist air movement between the depressurized void network and both indoor and outdoor air.

6.2 *ASD* Piping

6.2.1 *Air and water-tight*

All duct piping and fittings that transport air shall result in being air- and water-tight.

Exceptions: Soil gas intake locations, exhaust locations, and fan monitor test ports.

6.2.2 *Slope required*

Configurations that result in obstructed airflow as a result of allowing water to collect within duct piping are prohibited. Above-ground duct piping shall have a continuous downward slope toward the *suction point(s)* of not less than 1/8 inch (3.2 mm) per foot (30 cm) to allow condensation or rainwater within the pipes to drain downward into the ground beneath the slab or *soil gas retarder* membrane. When drainage cannot be achieved, other methods for draining collected water shall be provided.

6.2.3 *Positively pressurized pipe*

Positively pressurized *ASD* duct piping or other positively pressurized components of an *ASD* system shall not be installed in or pass through or under the conditioned space of the building.

Figure 6.2.3

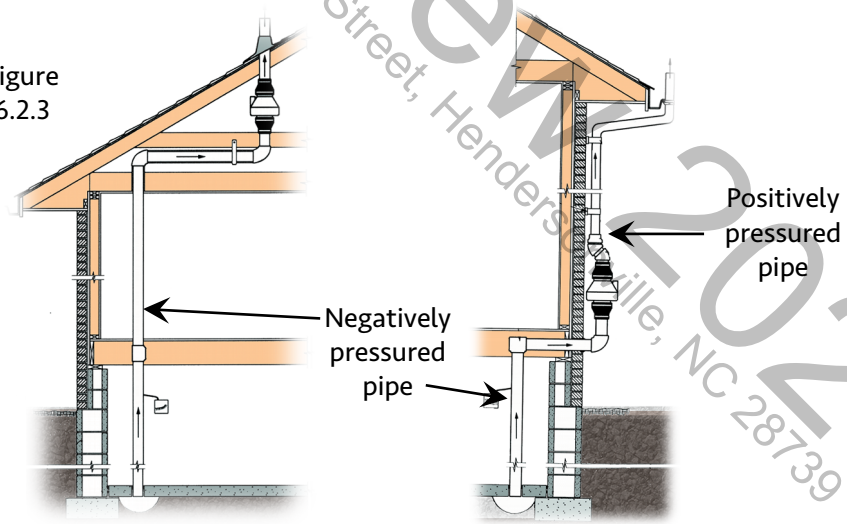

6.2.4 *Labels required (duct piping)*

Duct piping shall be labeled in accordance with Section 8.4.4.

6.2.5 *ASD pipe materials*

All *ASD* duct piping, except piping routed below concrete slabs or under *soil gas retarder* membranes shall be rigid, non-perforated and meet the following requirements:

a) ABS plastic piping shall comply with ASTM D2661, F628 or F1488. Pipe wall thickness shall be Schedule 40 with solid, cellular core or composite wall. ABS pipe joints shall be solvent welded in accordance with the pipe manufacturer's instructions, with solvent cement conforming to ASTM D 2235.

b) PVC plastic piping shall comply with ASTM D2665, F891 or F1488. Pipe wall thickness shall be Schedule 40 with solid, cellular core or composite wall. PVC pipe joints shall be joined in accordance with the pipe manufacturer's instructions with cement conforming to ASTM D2564. The joint surfaces for PVC plastic pipe and fittings to be solvent welded shall be prepared with:

   1. a primer conforming to ASTM F656; or
   2. a self-priming product; or
   3. as otherwise stipulated in the pipe manufacturer instructions.

c) All *ASD* plastic pipe fittings shall be of the same material as the plastic piping they are joined to, and solvent welded unless joined with flexible couplings in accordance with Section 6.2.6.

Exception 1: Alternative pipe materials

Alternative materials specified in codes for "Above-Ground Drainage and Vent Pipe" [3] are permitted. Alternative pipe materials that include iron, steel and copper piping shall be joined in accordance with the pipe manufacturer's instructions and as required by code.

For buildings classified as single-family structures that contain not more than four attached *dwelling* units on a contiguous foundation, other pipe products are permitted for use where deemed acceptable by:

a) local state licensing/certifying programs that provide written acceptability for the product; or
b) local code authorities for locations that have no state licensing/certifying program.

Exception 2: Downspout material on exteriors

Downspout and other light-duty rigid materials of appropriate durability are permitted for duct piping use if all of the following requirements are met:

a) The material shall be installed only at exterior locations at the pressure side of the *ASD* system;

b) Duct size shall be in accordance with Section 6.3.7;

c) Materials shall be no less than equal to the commercial durability of existing downspout materials used for such buildings where the system is being installed.

   Exception: Where the building is a designated heritage preservation site or operates under similar covenants, the materials used for exterior ducting are permitted to vary according to the historic preservation guidelines or other covenant requirements;

d) Use of the specific material shall be acceptable to the *client* and, if applicable, state licensing or certifying authorities; and

e) Joined connections for downspout materials and joints shall be welded to achieve a watertight seal or sealed and *mechanically fastened* at each joined connection using hardware fasteners that are weather rated for outdoor use. When joined connections are sealed and *mechanically fastened*:

[3] As point of reference for alternative piping, see the International Residential Code (IRC) Table P3002.1 (1).

1. Sealants shall be applied to the inner junction between joined downspout materials in a manner to both establish a complete seal and protect sealants at the bonded location from degradation. Sealants shall be designated by the manufacturer for use on gutter materials; and
2. Where pre-formed or modified flange connections are used to join sections of duct material, the upper portion of duct material at each connection shall be flanged inward and inserted downward into the lower portion of duct material to allow water and condensate to fully drain downward without collecting water and ice at joint connections.

6.2.5.1 Vapor Intrusion Piping

When *ASD* goals include *mitigation* of chemical vapor intrusion, all duct pipe materials shall meet specifications in ASTM D1785 for Schedule 40. For alternatives to plastic pipe identified in Section 6.2.5:

a) An evaluation shall be made prior to installation for alternative materials such as iron, steel, copper, or other pipe materials, relative to corrosive effects that chemicals may have, and

b) Downspout materials shall not be permitted.

6.2.6 *Flexible couplings*

Flexible coupling disconnects that comply with ASTM D5926 or ASTM C1173 are permitted as an alternative for joining two portions of *ASD* duct piping if they establish a secure watertight connection. Equivalent watertight methods are also permitted, such as threaded pipe or union disconnect. Flexible coupling disconnects or equivalent methods are permitted for situations that include:

a) where piping disassembly may be required in the future for maintenance purposes, such as required at sumps and where connecting an *ASD* fan;

b) where joining duct piping materials that are incompatible for solvent welding;

c) where physical constraints inhibit the ability to join duct pipe materials by means of a solvent weld;

d) where intended to minimize noise by breaking the direct transfer of fan vibration to duct piping; and

e) where local codes allow temporary removal and airtight replacement of *ASD* pipe sections to provide access to areas requiring maintenance or inspection of equipment as described in Section 6.2.9.

6.2.7 *Secure duct piping*

6.2.7.1 Duct piping shall be fastened to the structure of the building with hangers, strapping, or other supports that will withstand forces such as wind, ice and other forces or degradation over time. The fastening system shall comply with requirements in a), b), c) and d) of this Section 6.2.7.1.

a) Mechanical hardware or fasteners shall be durable for the purpose and weather-rated when employed outdoors;

b) The anchoring method and fastening materials shall be suitable to secure the anchors in a durable manner to whatever building surface is chosen for securing the duct piping;

c) Existing plumbing pipes, ducts or mechanical equipment shall not be used to support or secure duct piping; and

d) Fastening systems that rely only on extending a nail or screw through the duct piping and into a wall or other supporting surface shall not be used to secure duct piping.

6.2.7.2 Supports for *ASD* plastic piping shall be installed no less than every 10 feet (3 m) on vertical piping and 4 feet (1.2 m) on horizontal piping. Alternate *ASD* duct materials identified in Section 6.2.5, such as iron, steel, or copper, shall be secured in a manner that meets codes [4] and manufacturer recommendations. **Note**

[4] As point of reference, the International Mechanical Code (IMC), the International Plumbing Code (IPC) or the International Residential Code (IRC) that are published by the International Code Council.

6.2.8 *Provide access clearance*

Duct pipe routing shall not:

a) block egress from entrances and exits to the building, including those designated for fire and safety;

c) compromise effectiveness of fire suppression systems; or

b) block necessary access to any areas requiring maintenance or inspection such as mechanical equipment or a *crawl space*. **Note**

Exception: Flexible coupling disconnects or equivalent methods prescribed in Section 6.2.6 are permitted where allowed by code to provide access by temporary removal and airtight replacement of *ASD* pipe sections. Such configurations shall be marked or labeled "Removable for temporary access," or equivalent wording.

6.2.9 *Protect ducts from the elements (insulation)*

Duct piping shall be provided with thermal insulation in accordance with the following two requirements:

a) Where it is likely on a regular basis (e.g., annually or every few years) that freezing temperatures will result in ice buildup within duct piping that would adversely affect system performance, the insulation shall be protected from the elements and have an R-value of not less than 4; and

b) Where it is likely that condensation on exterior surfaces of duct piping would damage building materials, the insulation shall have an external vapor barrier and an R-value of not less than 1.8.

Note—For more extreme climates, greater R-values may be appropriate. **Note**

6.2.10 *Observe codes* [5]

Compliance with codes of the jurisdiction having authority (JHA) and utility company restrictions is required, including those related to maintaining the integrity of a buildings structural members; inhibiting the spread of fire and smoke; and proximity of piping relative to electrical components.

Codes (General) — **Note**

Inhibit the Spread of Fire/Smoke — **Note**

Gas Meters — **Note**

Sawn Lumber (Cutting, Notching and Drilling) — **Note**

[5] As point of reference, see the International Residential Code (IRC) as published by the International Code Council.

6.3 *ASD* Pipe Sizing

ASD duct piping shall be sized and configured to result in adequate capacity to transport the volume of air required for establishing a vacuum under each slab or membrane and within each airspace being depressurized by the *ASD* system.

6.3.1 *Minimum inside diameter—air volume capacity*

ASD duct piping from the exhaust point to the *soil gas collection plenum(s)* shall be equivalent or greater than the cross-sectional area of a 3-inch (75-mm) inner diameter (ID) pipe or as determined by *PFE* Analysis.

6.3.2 *When larger air volume needs are indicated*

Where *PFE* analysis indicates the necessary airflow for the entire system is more than 80 *cubic feet per minute (cfm)* (2.3 m^3/min), duct piping from the exhaust point to the *soil gas collection plenum(s)* shall be equivalent or greater than the cross-sectional area of a 4-inch (100-mm) ID pipe.

6.3.3 *When smaller air volume needs are verified*

Where *PFE* analysis indicates the necessary airflow for the entire system is equal to or less than 40 cfm (1.1 m^3/min), 2-inch (50-mm) ID duct piping from the exhaust point to the *soil gas collection plenum(s)* is permitted.

6.3.4 *Equivalent cross-sectional area*

Multiple pipes of various sizes that are joined in a parallel manner to result in a combined air volume capacity that is not less than the equivalent cross-sectional area of pipe diameters required in Sections 6.3.1 and 6.3.2 shall be permitted.

The minimum pipe diameter through parallel pipe sections shall be 2-inch (50-mm) ID pipe. **Note**

Informative Table 6.3.4 Cross-sectional Area Dimensions	
ID (inner diameter)	Cross-sectional Area
2-inch (50-mm)	3.1 sq. in. (20 cm^2)
3-inch (75-mm)	7.1 sq. in. (46 cm^2)
4-inch (100-mm)	12.6 sq. in. (81 cm^2)
6-inch (150-mm)	28.3 sq. in. (182 cm^2)

6.3.5 *Maintain whole-system air volume capacity*

The configuration shall not reduce duct pipe diameters or dimensions in the direction of airflow from the soil gas inlet(s) to the exhaust location such as to result in less whole-system air volume capacity than achieved with pipe sizes specified in Sections 6.3.1, 6.3.2 or 6.3.3. All components of the ducting system that reduce air volume transport capacity shall be accounted for in meeting this requirement, to include any rain caps or other obstructions at exhausts and circumference or size of slab penetration connections to soil gas.

6.3.6 *Multiple suction points*

Each suction pipe shall be sized to provide air volume capacity sufficient to establish a vacuum under each slab or membrane and within each airspace being depressurized by the *ASD* system.

Where air valves, dampers or baffles are used to adjust airflow balance:

a) the location, settings and design shall be included in "as built records" for the system; and

b) they shall be marked or labeled to indicate their purpose, settings and instructions, such as "Radon/Soil Gas System Air Valve. Do Not Alter From Marked Setting," or similar wording.

6.3.6.1 Drainage

When multiple suction points are employed, piping extended to secondary *suction pits* exclusively designed for condensate or rainwater drainage do not require any specific pipe diameter.

6.3.7 *Sizing for gutter downspout duct materials*

A natural reduction to airflow capacity shall be accounted for when using gutter downspout in accordance with Section 6.2.5 (Exception 2). Because crimped downspout flange connections reduce airflow capacity, gutter downspout materials employed shall be:

a) no less than 3 x 4 inch downspout material (75 x 100 mm) to meet capacities stipulated in Section 6.3.1 for 3-inch (75-mm) ID pipe; and

b) no less than 4 x 5 inch downspout material (100 x 127 mm) to meet capacities stipulated in Section 6.3.2 for 4-inch (100-mm) ID pipe. When even larger air volume needs are indicated, duct size shall increase respectively.

Gutter downspout material that is less than 3 x 4 inches (75 x 100 mm) shall not be permitted unless, in accordance with Section 6.3.3, *PFE* Analysis indicates that the necessary airflow for the entire system is equal to or less 40 *cfm* (1.1 m^3/min).

6.3.8 *Air velocities (see informative notes)* **Note**

6.4 ASD Exhaust Discharge

6.4.1 *General*

6.4.1.1 Measuring Distances—Stretched String

Distances shall be measured between the closest point of the exhaust opening to the closest point of all location requirements specified in Section 6.4 using the shortest distance, as if a string were stretched between them.

6.4.1.2 Definitions

Definitions a), b), c) and d) of this Section 6.4.1.2 shall apply to exhaust requirements in Section 6.4:

a) *Openings In Structure* The openings created in structural walls or roofs for the purpose of mounting windows, skylights, doors or other assemblies that might open to outdoor air;

b) *Operable Openings* The operable or constantly open portion of windows, skylights, doors and other openings designed to readily operate for increasing ventilation with outdoor air. Portions of a window specifically designed to temporarily open for cleaning are not considered readily operable for increasing ventilation with outdoor air;

c) *Exhaust Trajectory* The angle of the pipe or elbow at the *point of exhaust*.

The angle of the exhaust trajectory from the open end of the pipe or elbow is geometrically defined as the straight- or center-line axis that extends outward from the geometric center of the exhaust opening and is perpendicular to the plane of the exhaust opening; and

d) *Exhaust Spread* The exhaust spread extends outward from the *point of exhaust* in the shape of a circular cone. The tip or apex of the cone is at the geometric center of the exhaust opening and the cone profile grows larger as distance from the *point of exhaust* increases.

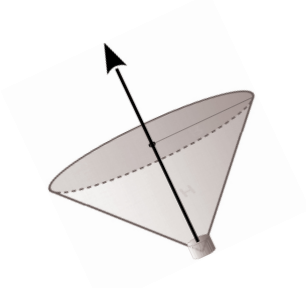

The total directional spread of the exhaust or cone is defined in degrees by the offset-axis angle of the cone profile compared to the cone's center-line axis. Expanding outward from the *point of exhaust*:

— An exhaust spread radius of 45˚ equals an exhaust spread diameter of 90˚.
— An exhaust spread radius of 11˚ equals an exhaust spread diameter of 22˚.

6.4.2 *Outdoors*

The point of exhaust for all soil gas vent systems shall be located outdoors.

6.4.3 *Directional spread (restrictions)*

The *exhaust trajectory* with an *exhaust spread* radius of 45˚ shall not encounter openings in any structures, building materials or the breathing space where individuals congregate or traverse within 10 feet (3 m) from the *point of exhaust*.

Exception: EPDM, composite, or otherwise layered water-tight roofing materials.

6.4.4 *Straight-line trajectory (restrictions)*

The *straight-line exhaust trajectory* with an *exhaust spread* radius of 11˚ shall not encounter openings in any structures, attic ventilation openings, building materials or the breathing space where individuals congregate or traverse within 20 feet (6 m) from the *point of exhaust*.

Figure 6.4

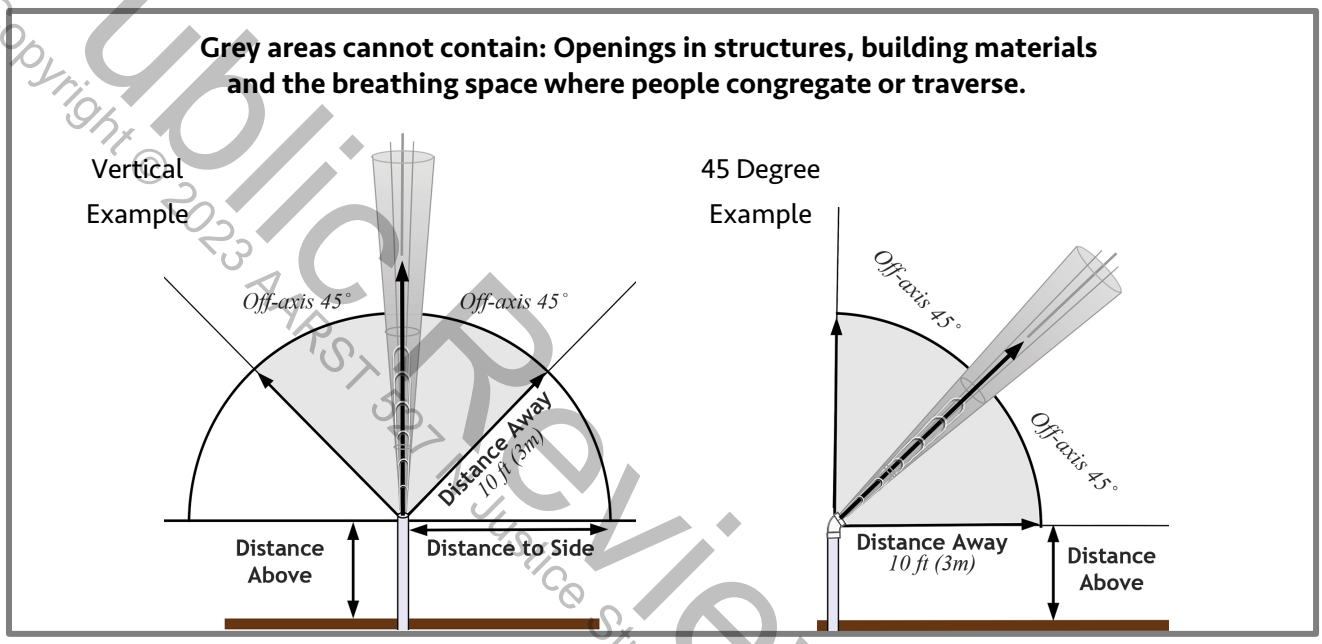

6.4.5 *Elevation above grade*

The point of exhaust shall be located not less than 10 feet (3 m) above grade nearest to the *point of exhaust* and shall be compliant with Section 6.4.3 (*Directional spread*) and Section 6.4.4 (*Straight-line trajectory*).

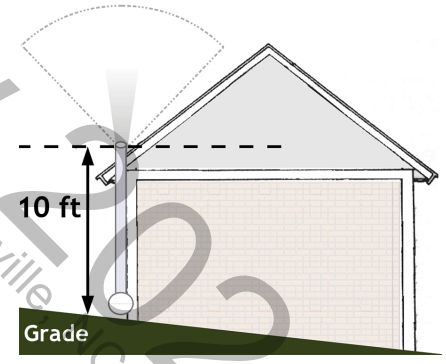

6.4.6 *Separation from operable openings in structures*

The point of exhaust shall be compliant with Section 6.4.3 (*Directional spread*) and located:

a) not less than 10 feet (3 m) horizontally to the side operable openings in structures; and

b) not less than 4 feet (120 cm) away from operable openings in structures that are below the point of exhaust.

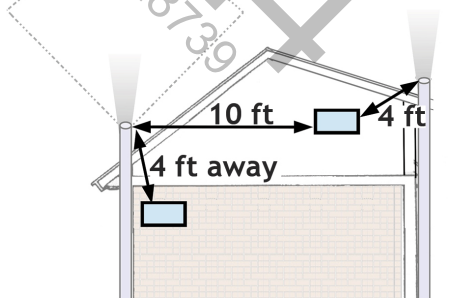

Note

6.4.7 *Separation from people*

In relationship to exterior flooring surfaces such as decking, patios, sidewalks, and exterior corridors where individuals congregate or traverse, the *point of exhaust* shall be:

a) not less than 10 feet (3 m) above or horizontally to the side of exterior flooring surfaces; and

b) compliant with Section 6.4.3 (*Directional spread*) for an elevation of not less than 10 feet (3 m) above exterior flooring surfaces.

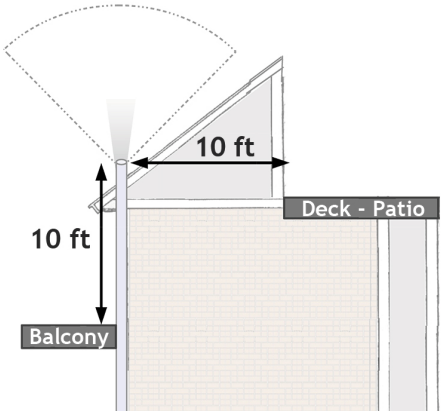

6.4.8 *Equipment wells and parapet roofs*

The point of exhaust relative to open equipment well airspaces or parapet roof construction, where areas are enclosed by more than two walls, shall comply with Section 6.4.3 (*Directional spread*), to include the breathing space where individuals conduct maintenance.

6.4.9 *Angled trajectories*

The point of exhaust shall be directed upward without obstruction at an angle that does not deviate more than 45 degrees from a vertical *exhaust trajectory*. The exhaust discharge shall not exhaust downward.

Exception: 90 degree horizontal exhausts shall comply with requirements in Section 6.4.12.

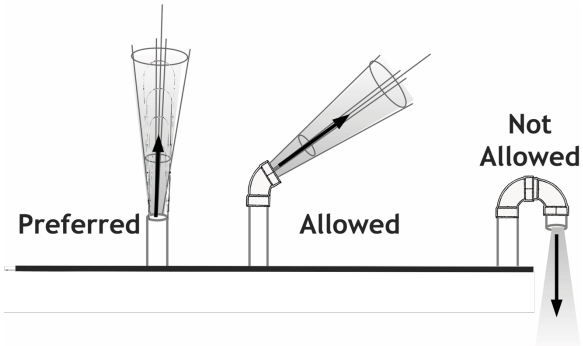

6.4.10 *Roof*

The *point of exhaust* shall comply with Section 6.4.3 (*Directional spread*) and, unless all requirements of Section 6.4.11 are met, the *point of exhaust* shall be:

a) not less than 1 foot (30 cm) above a pitched roof at the point penetrated;

b) not less than 6 inches (15 cm) above the edge of the roof when *ASD* piping is attached to the side of a building;

c) not less than 18 inches (46 cm) above a flat roof; and

d) not less than 4 feet (120 cm) horizontally away from a vertical wall that extends above the roof edge.

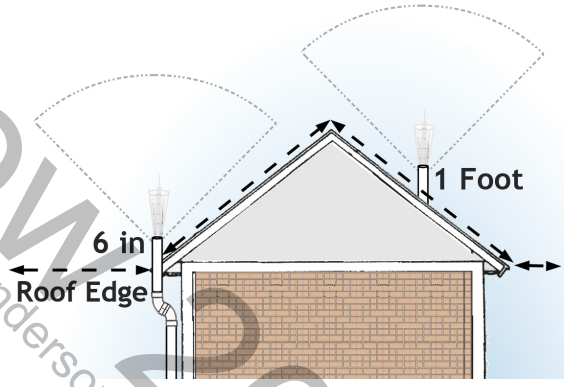

6.4.11 *Below the roof*

The *point of exhaust* shall be permitted to be located below the edge of the roof if the configuration complies with all requirements of Section 6.4 and requirements of a), b), and c) of this Section 6.4.11:

a) The justification for not locating the exhaust above the edge of the roof shall be recorded in the operations and maintenance plan and shall be based upon either:

1. the inability to comply with other requirements of Section 6.4 if the point of exhaust were located above the roof, or

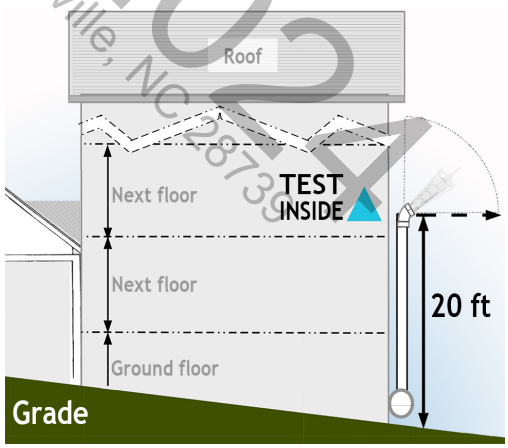

2. the edge of the roof exceeds 20 feet (6 m) above grade nearest to the point of exhaust;

b) The *point of exhaust* shall be: compliant with Section 6.4.3 (*Directional spread*); not less than 20 feet (6 m) above grade nearest to the point of exhaust; and not less than 4 feet (120 cm) away from operable openings that are above the point of exhaust; and

c) Testing shall be conducted within the occupiable area that immediately adjoins the 45˚ (*Directional spread*) required in Section 6.4.3. This testing is required no later than in conjunction with the initial post-*mitigation* test and shall be recommended for inclusion in all future post-*mitigation* tests.

6.4.12 *Horizontal trajectory*

While it is best practice to avoid horizontal trajectories, 90-degree horizontal exhaust trajectories are permitted if compliant with all other distances required in Section 6.4 and Section 6.4.12.1 or Section 6.4.12.2.

Note

6.4.12.1 90-Degree Horizontal Discharges

If passing the edge of the roof, the *point of exhaust* for a 90-Degree horizontal discharge shall not be less than 20 feet (7.5 m) above grade nearest to the point of exhaust. The point of exhaust shall comply with Section 6.4.3 (*Directional spread*) including for distances above the breathing space where individuals congregate or traverse as stipulated in Section 6.4.7.

Where "T" style rain caps are configured for 90-Degree horizontal discharge in two directions, both discharge trajectories shall meet these requirements.

Note

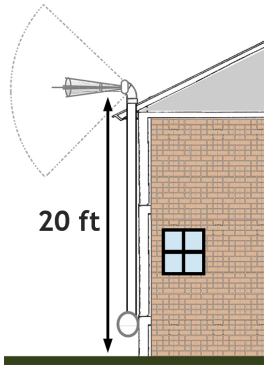

6.4.12.2 Diffused Horizontal Discharge/Rain Caps

The *point of exhaust* for diffused horizontal discharges shall not be less than 15 feet (4.6 m) above grade nearest to the *point of exhaust* and not less than 4 feet (120 cm) above or 15 feet (4.6 m) away from *operable openings* into the structures, such as windows, skylights and doors.

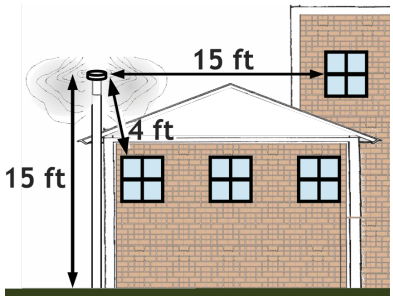

6.4.13 *Increased distances for large capacity systems*

When the *ASD* system is designed for larger airflow capacities with duct piping larger than 4-inch (100-mm), distances shall be increased beyond what is required in Section 6.4 to comply with Table 6.4.13 in the most current publication of ANSI/AARST SGM-MFLB.

6.4.14 *Protection from the elements (see Informative notes)*

Note

6.5 *ASD* Fan Installation

6.5.1 *Fan design*

ASD fans chosen shall be:

a) designed for *continuous duty* operation;

b) designed or otherwise sealed to reduce the potential for leakage of water and soil gas;

c) designed to allow rainwater or condensation from within *ASD* piping to pass through or around the fan when operating; and

d) represented by the manufacturer as both appropriate for the class of contaminants being extracted and manufactured with features that meet minimum safety standards , to include:

1. thermal protection integral to the fan that prevents dangerous overheating of the motor [6];
2. protection against electrical shock for fans mounted both on the interior and exterior of buildings, that may include a fan installed in a weatherproof protective housing that results in a code compliant configuration; and
3. other features that result in a safe fan installation, such as specified by codes[7] where evaluations of chemicals in soil have indicated that gases passing through the fan are corrosive or could result in a fire, explosion, or serious personal injury.

Note

6.5.2 *Safe locations required*

To avoid accidents that can result in systems leaking radon and soil gas into *occupied spaces* due to a failed pipe joint or other sealed connection:

a) *ASD* fans shall not be installed in the conditioned (heated/cooled) or otherwise occupiable space of a building; and

b) *ASD* fans shall not be installed directly beneath conditioned or occupiable spaces of a building, such as a fan installation within a basement, *crawl space*, or enclosed garage beneath occupiable space.

6.5.3 *Approved locations*

In compliance with requirements in Section 6.5.2, *ASD* fans are to be installed in attics, on the exteriors of buildings, or in garages that are not beneath conditioned or otherwise occupiable spaces.

Note—Ventilated attics or the exterior of the building are preferred locations. Considerations also include locations that avoid objectionable noise from fan vibration and exhaust air.

6.5.4 *Fan Installation*

Installation of *ASD* fans shall comply with requirements in a), b), c), d) and e) of this Section 6.5.4.

a) *ASD* fans shall be sized to provide the pressure difference and airflow capacity necessary to achieve the *mitigation* goals;

b) *ASD* fans shall be installed in a configuration that avoids condensation buildup in the fan housing. To achieve this requirement, *ASD* fans shall be installed on vertical runs of *ASD* piping or in accordance with the manufacturer's specifications;

c) *ASD* fans shall be mounted to piping using flexible couplings that comply with ASTM D5926 or ASTM C1173 or using an alternative method specified by the manufacturer that achieves a watertight connection; and

d) *ASD* fans subject to extreme climate conditions shall be protected with thermal insulation, as needed, in accordance with Section 6.2.10.

e) *ASD* fans shall not be installed below ground.

Exception: Locations that are created or exist below grade that are not beneath conditioned or otherwise occupiable space of a building, such as outside the building shall be permitted if configured to protect the fan and electrical components from damage and degradation. Such locations or any enclosures created shall include reasonable access for maintenance and adequate groundwater control such as drainage and, as applicable, *sump* pump systems. As applicable, all electrical components, including wiring and service switch configurations, shall be rated for use in wet or damp environments.

[6] As a point of reference, products evaluated by an OSHA Nationally Recognized Testing Laboratory for meeting applicable safety standards, such as UL 507 Standard for Safety for Electrical Fans published by Underwriters Laboratories Inc., Northbrook, Illinois. ulstandards.ul.com

[7] As a point of reference, additional information on code compliant fans rated for hazardous applications such as explosion proof fans are provided in the attached Companion Guidance for Vapor Intrusion.

7.0 SEALING

7.1 General

7.1.1 Sealing is not to be regarded as a permanent, stand-alone *mitigation* method.

> Note—The use of sealing alone has not been shown to significantly or consistently reduce radon entry into buildings[8]. The purpose and viable goal of sealing efforts are limited to achieving a continuous air barrier that resists air movement between soil and indoor air.

7.1.2 *Accessibility to cracks and openings*

For the purpose of sealing requirements herein, the term "accessible" shall mean *accessible* without destructive or significant disassembly of building components or finishes. If inaccessible openings or cracks may compromise the performance of a *mitigation* system, then they shall be disclosed to the *client* and included in *operation, maintenance, and monitoring (OM&M)* documentation.

7.2 Sealant Materials

7.2.1 *Caulking cracks*

When sealing cracks in slabs or foundation walls, the caulks and sealants shall be durable materials, such as urethane or polyurethane, complying with ASTM standard C920 class 25 or greater or equivalent material. Caulks and sealants shall be applied according to the manufacturer's recommendations.

Note

7.2.2 *For larger gaps*

Where a crack or joint is greater than 1/2 inch (13 mm) in width, foam *backer rod* or other comparable filler material to support wet caulk until it cures shall be inserted into the existing gap prior to applying caulk.

7.2.3 *For larger openings*

When sealing larger openings to soil in slabs and foundation walls, the materials shall be durable, such as: non-shrink cementitious products; expanding foam; plastic; or other comparable materials and methods appropriate for the application.

7.2.4 *For heated pipes and flues*

When sealing openings around combustion appliance flues and hydronic heat or steam pipes, noncombustible materials shall be used.

7.2.5 *For sump lids and hatchway doors*

For *sump* lids, hatchway doors or other items that require access in the future, nonpermanent sealant materials are required, such as silicone caulk, gasket materials or other equivalent method.

7.2.6 *Vapor Intrusion sealants*

When *ASD* goals include *mitigation* of chemical vapor intrusion, the *contractor* shall advise the *client* if any sealant products used are known to have long curing periods or contain constituent chemicals identified in *mitigation* goals.

Note

7.3 Accessible Slab Cracks

Accessible openings to soil around suction piping, utility penetrations and where the slab meets the foundation wall shall be closed or sealed to resist air movement between soil and indoor air.

Note

7.3.1 *Perimeter channel drains*

Accessible gaps to soil at perimeter channel drains and foundation drainage boards shall be closed or sealed to the extent practical without compromising water control capability of the perimeter drainage system.

[8] The EPA "Consumer's Guide to Radon Reduction" 402-K92-003, August 1992 and 402/K-10/005, December 2016

Where sealing perimeter channel drain gaps, methods shall employ materials that will achieve closure yet retain flexibility to allow natural movement of foundation slabs and walls.

7.4 Other Openings to Soil

Other *accessible* and significant openings to soil in slabs or walls shall be sealed to resist air movement between soil and indoor air, such as: at support posts; electrical conduits that are open to soil; and openings for plumbing fixtures under bathtubs.

7.4.1 *Block walls*

Where Block Wall *Depressurization* is installed, all *accessible* openings and gaps in hollow block masonry walls that surround the hollow void network being depressurized shall be closed to resist air movement between the depressurized void network and both indoor air and outdoor air. Closure shall result in resisting migration of air into the depressurized void network, to include:

a) open blocks at the top course of hollow block masonry walls and open blocks under door or window openings; and

b) cracks or openings in the block walls, both inside and outside of the building.

Materials used to close openings and gaps shall be in accordance with Sections 7.2.3, 7.2.4 or equivalent.

7.4.2 *Basement de-watering systems*

If an *ASD suction point* must be installed into a basement de-watering system, exposed openings into the drainage system that can be sealed without compromising water drainage features shall be sealed, to include as required in Section 7.3.1.

Note

7.5 Sumps and Pits

Sumps or other *accessible* pit openings in the interior slab(s) that connect to soil air shall be covered and sealed to the extent possible without compromising the water control capability of the *sump*. The manner of closure shall not compromise safety concerns, such as emergency pressure relief discharge from hydronic heating system water boilers. Covers are not required for pits that do not connect to soil air.

7.5.1 *Sump cover specifications*

Sumps in interior floors that connect to soil air shall have a rigid lid made of sturdy and durable plastic such as polycarbonate plastic or other rot-resistant, rigid material sufficient to support anticipated loads in the area of use. The lid shall be *mechanically fastened* in a manner to facilitate removal for maintenance. The lid shall be sealed to resist air movement between soil gas and indoor air with a gasket or with nonpermanent caulk such as silicone. Penetrations through the lid such as gaps around electrical wiring, water ejection pipes and *ASD* piping shall be sealed.

7.5.1.1 Sump Pit Access

Where work includes installing, modifying, or altering a sump cover for a pit that includes a *sump* pump, the sump cover shall include a removable handhole port or section of the lid no less than 4 inches (10 cm) in diameter that allows physical access for routine verification that pumps are operational. The access port shall achieve open access and reclosure without the use of sealants, as can be achieved by way of friction fit or screw-on caps, rubber grommets or equivalent methods. *ASD* suction pipe connections shall not be used for access ports.

Note

7.5.1.2 Labeling Required (sump covers)

Sump lid labels shall be provided in compliance with Section 8.4.6 a.

7.5.3 *Sump pump water discharge*

If flexible rather than rigid water discharge piping is found, the *contractor* shall recommend in writing that rigid pipe for water discharge from permanent *sump* pumps be installed. *Sump* pumps or piping configurations for water discharge from the sump pump shall have a backflow prevention valve as typically

provided to protect against pump failures. Should there be a need for the *contractor* to alter the destination of discharged sump water, the destination shall meet requirements of local authorities.

7.5.4 *Chemically contaminated water*

When *mitigation* goals include *mitigation* of *chemical vapor intrusion* and the *sump* needs to be installed or its discharge modified, *sump* water shall be handled and discharged to a destination as specified by a qualified environmental consultant.

7.5.5 *Surface water relief (slabs)*

An alternative drainage system shall be provided and installed in accordance with guidance in Section 7.8.1 when sealing a *sump* or other slab opening that is the only drain relief for excess water on the slab surface.

7.6 Membranes Over Exposed Soil

The membrane material shall be not less than nominally 6-mil (0.006 inch; 0.152 mm) in thickness.

7.6.1 *Durable for application*

Where exposed soil areas are expected to be regularly traversed for storage or other purposes, membranes with tensile strength and puncture resistance to withstand anticipated loads shall be employed. Where a membrane will be exposed to sunlight, such as at window wells in a *crawl space*, the membrane shall be resistant to UV degradation.

Exception: Where running mats or other protective materials are installed to protect the membrane where trafficked; where heavy items are stored; or where exposed to sunlight.

7.6.2 *Vapor intrusion (membranes general)*

The *contractor* shall account for the known *chemical(s) of concern* in relationship to manufacturer guidance on *soil gas retarder* materials to help ensure degradation of the material will not occur over time when in contact with the *chemical of concern*.

7.6.3 *Seams (membranes general)*

Seams where membrane materials are joined shall be sealed in accordance with Section 7.7.1 when sub-membrane *depressurization* (SMD) is employed. Otherwise, seams between adjacent membrane sheets shall be overlapped not less than 12 inches (30 cm).

7.6.4 *Repairs*

Tears or punctures in the membrane shall be sealed by:

a) a tape recommended by the membrane manufacturer; or
b) an additional sheet of the membrane material that covers and overlaps the tear or puncture not less than 6 inches (15 cm) on all sides and that is sealed with a caulk complying with ASTM C920 class 25 or greater, or an equivalent method.

7.6.5 *Label membranes or access ports*

Membranes or the *crawl space* access port shall be labeled in accordance with Section 8.4.6 b.

7.6.6 *Surface water relief (See important informational notes)* **Note**

7.7 Sub-Membrane Depressurization (SMD)

In addition to all requirements in Section 7.6, *soil gas retarder* membranes associated with SMD shall be sealed and secured in accordance with Section 7.7.1 through Section 7.7.4 to result in a closed *soil gas collection plenum* under the membrane that resists air movement between soil and air above the membrane.

7.7.1 *SMD—Seams*

The seams between adjacent membrane sheets shall be overlapped and sealed with a compatible sealant or a caulk complying with ASTM C920 class 25 or greater. Alternatively, a method such as membrane tape recommended by the manufacturer that results in an equivalent durable bond shall be permitted.

7.7.2 *SMD—Pipe penetrations*

The opening around penetrations of a *soil gas retarder* for *ASD* duct piping and other utility pipe penetrations shall be fully closed using materials and methods that result in permanent closure. **Note**

7.7.3 *SMD—Securing the membrane*

Soil gas retarder membranes shall be *mechanically fastened* to foundation walls or footings and at structural supports. All outer edges of the membrane shall be secured by materials and methods that are capable of withstanding anticipated loads that might pull or tear the membrane away from walls or other surfaces.

Any wood installed as part of a *mitigation* system that directly contacts masonry or soil, such as when employed to secure a membrane, shall be resistant to decay and insects or otherwise protected.

7.7.4 *SMD—Sealing the membrane perimeter*

The entire perimeter of the sub-membrane *soil gas collection plenum* shall be sealed or closed in a manner to resist soil gas movement between the soil and air above the membrane using caulk that complies with ASTM C920 class 25 or higher, or alternative materials or methods that provide similar performance.

When portions of the *crawl space* cannot be accessed or have insufficient height to work in a safe manner, as established by the Occupational Safety and Health Administration (OSHA) or other authorities, the edges of the membrane within the boundaries of *accessible* areas shall be closed. **Note**

Exception: Where it can be demonstrated to be warranted, systems are permitted with a portion of the membrane edges unclosed. Such design shall meet any additional requirements in Sections 6.1.4 (*Non-habitable air spaces*) and Section 12.6 (*Soil gas dilution*). Open membrane edges shall be disclosed to the *client(s)* in documentation along with justification for the design. **Note**

7.8 Drains

7.8.1 ***Drains to soil*** *(see informative notes)* **Note**

7.8.2 *Utility drains to soil*

Openings in the slab or at *sumps* that serve for mechanical system water drainage and are likely to draw soil air into a building shall be modified to stop this airflow. The modification shall retain drainage capability, such as the use of a one-way flow valve, re-routing the drain line into a condensate pump or floor drain, or a trap in the drain that can hold at least 6 inches (15 cm) of water.

7.8.3 ***Drains to daylight*** *(see informative notes)* **Note**

7.9 Sealed Isolation Assemblies

Sealed isolation assemblies are not to be regarded as a permanent, stand-alone *mitigation* method. **Note**

7.9.1 *Sealing (isolation assemblies)*

When applying *depressurization* or *pressurization* to air within a *sealed isolation assembly*, any *accessible* openings between the isolated space and areas surrounding the isolated space shall be sealed to resist air movement between the isolated airspace and both indoor and outdoor air. Access doors or hatches that are not to be permanently sealed shall be fitted with airtight gaskets and a means of positive closure.

7.9.2 *Labeling required (isolation assemblies)*

Access ports into sealed isolation assemblies shall be labeled in accordance with Section 8.4.6 c.

8.0 FOR ALL SYSTEMS AND METHODS

8.1 Long-Term Plan for OM&M

A plan for long-term *operation, maintenance, and monitoring (OM&M)* is required for all *mitigation* methods.

8.2 System Monitors

8.2.1 *Viewable operating range monitors*

All *mitigation* systems that incorporate a fan shall include a system monitoring mechanism to directly indicate if the fan, blowers, or other integral mechanical components are operating within the established operating range. Design and installation of such monitors shall comply with requirements in both a) and b) of this Section 8.2.1.

a) Continuous Display
The monitoring device shall provide continuous display of a measured value within the established operating range. The monitor shall be located where it is easily seen and protected from damage or degradation.

b) Start up values
Monitoring devices that continuously display a viewable operating range shall be clearly marked or labeled to indicate the measured pressure, airflow volume or amperage readings that existed at the time *mitigation* goals were achieved.

Exception: Fan monitors that provide remote electronic monitoring and notification in the event of *ASD* fan or other mechanical failure, such as to accommodate where occupants are not the responsible party for system maintenance.

8.2.2 *Active notification monitors*

All *mitigation* systems that incorporate a fan shall also include a monitoring mechanism that actively alerts occupants or other responsible individuals in the event of fan or other mechanical failure. The alert mechanism shall include one or more of the following warning signals:

a) Audible notification that is clear and distinct; or
b) Visual light notification that is vividly observable; or
c) Notification by telemetric means, such as by email or other electronic communication.

Note

8.2.3 *Required for all system monitors*

Requirements for all mechanisms or systems that monitor fan or airflow functionality include:

a) System monitors shall be *readily accessible* to individuals responsible for system maintenance without destructive or significant disassembly of building components or finishes.
b) System monitors shall be protected from the elements and durable for the ambient environmental conditions;
c) System monitors shall be labeled in accordance with Section 8.4.3;
d) Battery operated components shall not be used unless equipped with a low-power warning feature;
e) Components that require electricity for indication of system failure shall be on non-switched circuits and designed to reset automatically when power is restored after power supply interruptions; and
f) Components that require electricity for indication of system failure shall not be powered by the same branch circuit as the *mitigation* system fan(s).

Exception: Where the monitoring system has an independent means, such as a battery backup system, that actively alerts occupants or other individuals of component failure or branch circuit deactivation.

8.3 Electrical

The electrical service for *ASD* Fans shall comply with the following provisions in addition to all other electrical code requirements. [9]

8.3.1 *Disconnect required*

For *ASD* fans, a means of electrical disconnect shall be provided in the line of sight and within 6 feet (1.8 m) of the *mitigation* system fan(s).

Exception: A switch remote from the fan location shall be permitted when concerns sufficiently warrant preventing inadvertent deactivation of the fan.

8.3.2 *Labels required (disconnects)*

Labeling shall comply with Section 8.4.5.

8.3.3 *Protection from shock*

All outdoor wiring for *ASD* fans shall be protected in conduit, unless otherwise permitted by local code, and shall not be a plug disconnect.

8.3.4 *Not allowed*

Wiring shall not be located in or chased through the *ASD* duct piping. **Note**

8.4 Labeling

8.4.1 *Label materials and lettering*

All labels shall be made of durable materials that are capable of withstanding ambient conditions where mounted. All label lettering and other annotation on systems shall be of a color in contrast to the color of the background on which the lettering is applied. The minimum lettering size shall conform to requirements a) and b) of this Section 8.4.1.

a) Label titles shall be with lettering not less than 1/4 inch (6 mm) in height.

b) Additional informational text shall be with lettering not less than 1/8 inch (3 mm) in height.

8.4.2 *Primary labels*

A system description label shall be placed on a primary component of each system. Approved locations for the system description label include on duct piping near an *ASD* fan monitor, within 12 inches (30 cm) of the electric service panel or other prominent location. System monitor devices shall have a label on or near the mechanism that describes how to interpret the monitor and actions to take if a monitor indicates fan failure or degraded fan performance.

The primary label titles shall describe the system purpose, such as "Radon Reduction System" or "Soil Gas Control System." Information required on or near the label(s) shall include content required in Sections 8.4.2.1 or 8.4.2.2 of this Section 8.4.2.

[9] As required by local statutes. For further information, see NFPA 70 The National Electric Code® as published by NFPA.

8.4.2.1 Owner-Occupied Maintenance

For systems installed in individually owned and occupied *dwellings* or units where system maintenance and monitoring for continued effectiveness will be the responsibility of the owner, the primary label shall include:

a) Date of installation;

b) Maintenance and monitoring instructions, to include:

1. A description of the system monitors and actions to take if the system monitors indicate system degradation or failure, and
2. A recommendation to verify continued system effectiveness over time, such as:
   - a recommendation to conduct a radon test at least every 2 years, or
   - other monitoring procedures as specified in an *OM&M* plan for radon or chemical vapor intrusion systems;

c) State and federal informational resources, to include websites or phone numbers; and

d) The installer's name, phone number and applicable certification/license identification.

Fig. 8.4.2.1 Example

RADON REDUCTION SYSTEM
Installed: _____ WC" ____
Maintenance
(1) Routinely Check Pressure Gauge
The fan is active if oil level on the left is different from the right.
If the fan appears to be off:
√ Check hose connection on gauge
√ Check electrical (switch or breaker)
√ If still indicating a problem, call for service.
(2) Retest for radon every 2 years
For Service: 1-800-RN2-2222
R. Smith RPP# 54321
Health Department Contacts:
www.epa.gov/radon; the radon hotline 1-800-SOS-RADON (Persons with hearing or speech difficulties should call 711.); or at www.epa.gov/radon/find-information-about-local-radon-zones-and-state-contact-information

8.4.2.2 Independent Maintenance

Where system maintenance and monitoring are the responsibility of someone other than the occupant:

a) Informational content on a primary label that is observable to building maintenance staff or occupants shall include:

1. A description of system monitor(s) or monitoring systems and, as applicable, actions to take if the system monitor indicates system degradation, and
2. The name and contact information of the party responsible for maintenance and repairs.

Fig. 8.4.2.2 Example

RADON REDUCTION SYSTEM
System Fan Monitor
The system fan is active if oil level on the left is different from the right. Please call to report if the fan appears to be off.
This system is under the care of:
R. Smith, L.L.C 1-800-RN2-2222

8.4.3 *System equipment*

System equipment shall be marked or identified with a label title that portrays the system purpose. The labeling shall also comply with requirements in a), b) and c) of this Section 8.4.3.

a) Mechanical Equipment

ASD fans and other system air handling and mechanical equipment shall be labeled.

b) System Monitors

The system monitoring device(s) shall be provided a label near the mechanism, such as a primary label or other label, that includes:

1. Information on how to interpret the monitor; and
2. What to do if a monitor indicates fan failure or degraded fan performance; and

c) System Controls

Where systems include controls for mechanical equipment, a label shall be provided on or near the control mechanism. System control settings that existed at the time *mitigation* goals were achieved

shall be clearly marked on the equipment, a label or provided with equipment instructions. General instructions for operation of each control mechanism shall be provided.

8.4.4 *Label duct piping*

Interior duct piping shall be marked with not less than one label at each floor level and within attics, garages and *crawl spaces* that portray the system purpose. Examples include "Radon Reduction System" or "Soil Gas Control System." **Note**

8.4.5 *Label electrical disconnects*

Disconnects, such as switches or plugged connections, for turning off *mitigation* system fans shall be labeled or marked to indicate their purpose. The label title shall identify that the disconnect as a component of the *mitigation* system. Examples include "Radon Fan – Do Not Turn Off," or "Radon Fan – Do Not Unplug."

8.4.6 *Label sealed components* **Note**

Certain components that are sealed to resist air movement between soil and indoor air shall be labeled in accordance with requirements in a), b), c) and d) of this Section 8.4.6.

a) Sump Covers

Sump lids shall be labeled to identify the lid as a component of the *mitigation* system.

Note—Instructions are recommended, such as "If opened, take care to reseal this cover."

b) Crawl Spaces or Membranes

Where *soil gas retarder membranes* have been installed, a label or marking shall be located in a conspicuous place or places. Examples include access panels or immediately visible once entering the *crawl space*, such as on membrane material near the access location. The label shall include:

1. A label title that indicates the presence of a *mitigation* system component, and
2. Instructions to help preserve the integrity of the membrane. Examples include, "Do Not Alter. Damage or alteration to plastic membrane sheeting can negatively impact system performance".

c) Access Locations

Where *mitigation* methods address air within a *non-habitable airspace* that can be accessed, labels shall be provided in a conspicuous place on the outside of access ports, hatches, and doors into the airspace or immediately visible once entering the airspace. The label shall include:

1. A label title that indicates the presence of a *mitigation* system component;
2. Instructions to help retain system effectiveness. Examples include "Keep closed. Leaving open can negatively impact building safety"; and
3. Instructions essential health and safety guidance where there are known health and safety hazards. Examples include:
   a. "Warning—Entry into this airspace can be hazardous. Precautions to ventilate this area are recommended;" and
   b. Applicable descriptions of recommended personal safety procedures, such as the possible need for protective gloves, clothing, respirators, or other personal safety equipment.

8.5 Inspection for Compliance

Prior to delivery and release of the completed system(s), a *qualified radon mitigation professional* or qualified *soil gas mitigation professional*, as applicable, shall have verified:

a) compliance with this standard;
b) conformance with the intended design criteria; and
c) compliance with local statutes and codes, including for related work conducted by other qualified professionals, as applicable and to the extent practicable.

Any items found that are not compliant with this standard and local statutes or codes shall be brought into compliance.

Exceptions: Professional obligations to identify and correct items that are noncompliant with this standard of practice or local statutes, or codes shall have limits in accordance with Section 8.5.1.

8.5.1 *Limitations of professional obligations*

Contractor obligations regarding inspection for compliance shall be limited to visual inspection and photographic evidence of *readily accessible* components that do not require disassembly of components or finishings to achieve access. Limits to a *contractor's* obligations include a) and b) of this Section 8.5.1.

a) *Contractors* shall not be obligated to meet a minimum requirement in this standard of practice where the requirement is found to be in violation of local statutes or codes; and

b) *Contractors* shall not be obligated to have identified all items that may be noncompliant with local statutes or codes due to:

1. inherent limits of a visual inspection.
2. existence of conditions of that are outside the scope of work and skill sets normally associated with *mitigation*, such as preexisting conditions of mechanical or electrical systems.
3. reliance on superior capabilities reasonably expected from contracted specialists for knowledge of statute and code compliance; or
4. deviations or interpretations of a local jurisdiction that may subjectively or factually conflict with national or regional trends in code and code interpretation.

8.5.2 *Review with clients (See important informational notes)* **Note**

8.6 Retention of Records

Records of all *mitigation* work performed shall be kept for no less than: 6 years, as required by state regulations, or for any warranty period, whichever is longest. Health and safety records including *mitigation Installer radon* or *soil gas* exposure logs, as applicable, and other appropriate medical monitoring records shall be maintained as required by state or federal statutes.

Note

9.0 POST-MITIGATION

9.1 Functional Evaluations

Upon completion of the *mitigation* effort, as installed or augmented, actions prior to releasing the work product for post-*mitigation* testing of indoor or soil gas concentrations shall comply with all portions of this Section 9.1 and Section 8.5 (Inspection for Compliance).

9.1.1 *General*

Jobsite records shall be updated to include:

a. As-installed site plan diagrams or sketches that shall include key components of the *mitigation* system as they exist upon completion of the *mitigation* effort or alteration; and

b. Fan equipment model(s) and any building systems installed or altered to achieve *mitigation* goals.

9.1.2 *Non-ASD mitigation methods*

Once *mitigation* efforts that include non-*ASD mitigation* systems or methods are complete, evaluations to validate functional performance shall be conducted as required in Section 12 (Non-ASD Methods).

9.1.3 *ASD systems*

Once all sealing, piping and other components of the *ASD* system are complete, evidence relative to system performance shall be gathered as required in a), b) and c) of this Section 9.1.3.

a) *Depressurization* Performance

A minimum of one differential pressure measurement shall be made at a location distant from the suction point(s) with intent to evaluate if *depressurization* has been achieved within each targeted soil gas collection plenum. The term soil gas collection plenum shall include where subterranean pathways, such as voids or drain systems, are targeted as a primary source of soil gas entry.

The measurement shall be made using a differential pressure gauge that is capable of reading 1/1000-inch water column (.25 Pa) differences in air pressure. Jobsite log records of the event(s) shall include:

1. The outdoor temperature and building operating conditions, in accordance with requirements in Section 5.3.3; and
2. The measured air pressure within targeted *soil gas collection plenum(s)*, relative to indoor air.

Exception 1: Where, as with stone walls, it is not physically possible to measure *depressurization* with a pressure gauge, evidence obtained and recorded in jobsite logs from smoke testing or other *diagnostic* tools or method is permitted.

Exception 2: Where *PFE* test locations or test ports cannot be created due to building materials that are virtually irreplaceable, such as for historical preservation properties, or due to denied access to locations of interest. To exercise this exception, jobsite logs shall include the reason why and alternative locations or methods used for verifying design effectiveness. **Note**

b) Whole System Vacuum

The vacuum within the *main trunk* duct piping on the negatively pressured side of the fan shall be measured and recorded in jobsite logs. If the measurement is outside of the manufacturer recommended operating range, further investigation is required with findings recorded in jobsite logs.

c) Other Pertinent Conditions

A description of other pertinent observations shall be recorded in jobsite logs, to include:

1. A summary of materials and permeable conditions found under targeted slabs and actions taken to comply with requirements for *suction pit* size.
2. Identification of area targeted for *mitigation* compared to size of the full building footprint; and

3. Locations of any sizable, unclosed openings between soil and indoor air that could not be closed to restrict air movement between soil and indoor air.

9.1.4 *Vapor intrusion and ASD*

Where goals include mitigating chemical vapor intrusion, a report shall be provided to *clients* prior to release of the system for further evaluations and testing that includes:

a) measured values and conditions observed as required in a), b) and c) of Section 9.1.3;

b) measured values for *cfm* (m^3/min) rate of exhausted air; and

c) as-installed site plan diagrams or sketches and a comparison of the mitigated area relative to *COC* concentrations measured in soil.

Note

9.1.4.1 Vapor Intrusion Test Ports

For systems intended to mitigate chemical vapor intrusion (VI), test ports for future *PFE* and soil gas sampling shall be created and configured to result in permanent test ports that are prominently documented in the *OM&M* manual. The test ports shall comply with a) and b) of this Section 9.1.4.1.

a) Physical properties

The test ports shall be:

1. *accessible* for future measurements without disassembly of building components or finishes;
2. installed to not present hazards such as tripping hazards to occupants;
3. installed after removing a portion of aggregate, packed fill or expansive soils that can often exist under a test port;
4. installed to retain functionality over time, such as by implementing hardware to allow easy access and closure of the test port in the future; and
5. sealed in a permanent, airtight manner at the opening between test port hardware and penetrations of a slab or *soil gas retarder* with a configuration that durably secures the test port in place.

b) Test port locations

The test ports shall be:

1. located at distances remote from the *suction point* to best characterize the full expanse of the targeted *soil gas collection plenum(s),* such as the most distant *accessible* slab locations;
2. installed at no less than three locations for any structure and include:
   a. at least one location for each slab floor of the building to include each basement, upper slab, garage and other slab-on-grade area that is greater than 64 square feet (6 m^2); and
   b. at least one location for soil gas collection plenum(s) addressed by each slab and membrane suction point.

9.2 Radon Test After Mitigation

For radon *mitigation*, initial post-*mitigation* testing shall comply with all provisions of this Section 9.2.

9.2.1 *Timeliness*

To provide an initial measure of system effectiveness, a short-term radon measurement shall be conducted no sooner than 24 hours after a *mitigation* system is operational and within 30 days after installation.

Exception: It shall be permissible that the initial retest after *mitigation* is delayed beyond 30 days in accordance with Section 9.2.4.1.

9.2.2 *Test protocols*

All testing shall be conducted in accordance with the most current version of ANSI/AARST MAH "Protocol for Conducting Measurements of Radon and Radon Decay Products in Homes;" in accordance with any state

protocols and requirements, where applicable; and as allowed in Section 9.2.4. For compliance with ANSI/AARST MAH:

a) Radon test devices employed shall be listed as approved by a national authority such as the National Radon Proficiency Program (NRPP), the National Radon Safety Board (NRSB) or a program that verifies compliance with the most current version of ANSI/AARST MS-PC; or as required by local statutes for jurisdictions that have a program for evaluating and approving devices.

   Note—Identification of two existing certification bodies is not an endorsement of either program.

b) A Qualified Measurement Professional is an individual who has demonstrated a minimum degree of appropriate technical knowledge and skills specific to radon measurement in single-family residences as established in listing or certification requirements of:

   1) a national program that is compliant with requirements in Section 13.1; and

   2) as required by statute, state licensure or certification program, where applicable.

9.2.3 *Additional tests*

As applicable when exhausts are located below the roof or when non-*ASD mitigation* methods include mechanically induced pressurization or dilution, testing specific locations for *diagnostic* purposes or no later than the initial retests after *mitigation* is required in accordance with Section 6.4.11 c (Below the roof), and Sections 12.3 (Indoor Air Pressurization) and 12.4 (Soil Air Pressurization).

9.2.4 *Contractor obligations*

Contractor obligations to ensure post-*mitigation* testing is conducted have been satisfied once post-*mitigation* test results are accepted by the *client* as satisfactory evidence for the initial status of system effectiveness. For the purposes of this initial post-*mitigation* test, *contractor* obligations are satisfied regardless of whether this testing is conducted by:

a. an independent, *qualified measurement professional*; or

b. the *contractor* who installed the *mitigation* system(s), if also a *qualified measurement professional* (and if allowed by local statutes or code). To avoid any appearance of conflict of interest, the *contractor* shall recommend to the *client* that post-*mitigation* testing be conducted by an independent *qualified measurement professional*; or

c. the owner or occupant of the home.

9.2.4.1 **Exception:** *Contractor* obligations to obtain some form of test data that sufficiently demonstrates initial system effectiveness are, under this standard, satisfied when the *client* and *client* representatives or other person responsible for the property:

a) refuse to provide access or retest reports, or

b) are nonresponsive to outreach efforts to coordinate testing or obtain test reports; or

c) are prohibited by state or local law from contacting the person(s) responsible for the property.

If access is refused or legally unavailable, or if reasonable efforts across 3 months after installation do not result in a response, the *contractor* shall forward a radon test kit to the property in care of the current occupant. The firm analyzing the test kit shall be an independent laboratory listed by NRPP, NRSB or equivalent national program, or by the state radon laboratory licensing or certification program. The laboratory shall be instructed to deliver copies of the test results to the person(s) who conducted the test.

Note

9.3 Testing for *Chemicals of Concern* (*COC*)

Due to various considerations, *qualified soil gas mitigation professionals* are not required under this standard to ensure post-*mitigation* measurements are conducted for hazardous chemical vapors or other substances.

10.0 DOCUMENTATION—ALL SYSTEMS AND METHODS

10.1 Long-Term Plan for OM&M Required

A long-term plan for *operation, maintenance, and monitoring (OM&M)* is required for all *mitigation* systems and methods applied. The plan for *OM&M* shall be provided in an information packet, in accordance with Section 10.2, or in an *OM&M* manual, in accordance with Sections 10.5.

10.2 Owner-Occupied Maintenance

The *contractor* shall provide an information package that contains a plan for *OM&M* that includes essentials for *ASD* systems installed where the *dwelling* or unit is both individually owned and occupied by the person(s) responsible for *OM&M*. The information package shall be:

a) labeled "Radon Reduction System," "Soil Gas Reduction System" or as otherwise labeled to describe the purpose of the information package; and

b) attached to the system piping in a visible location within interior spaces.

Exception 1: If no portion of the system is visually *accessible* within interior spaces, the information package shall be securely mounted in another interior location where it is visually and physically *accessible*, such as in a mechanical room.

Exception 2: Where the information package is electronically available on a website for a period of not less than 6 years at no additional cost to current or future person(s) responsible for *OM&M*. When exercising this exception, the primary system labeling, required in Section 8.4.2.1, shall include instructions for how to electronically obtain the information package. If requested, the *contractor* shall similarly provide the information package in paper or electronic media per the request.

10.2.1 *Information package*

The information package shall include content that complies with a), b), c), d) and e) of this Section 10.2.1.

a) Essentials

Consistent with owner-occupied labels in Section 8.4.2.1, the information package shall include:

1. The date of installation;
2. Maintenance and monitoring instructions applicable to the *mitigation* purpose, to include:
   a. A description of system monitors and actions to take if system monitors indicate system degradation or failure; and
   b. A recommendation to verify continued system effectiveness over time, such as either:
      — a recommendation to conduct a radon test at least every 2 years and to check system monitors quarterly to ensure the system is still functioning; or
      — other monitoring procedures as specified in an *OM&M* manual as required herein, such as required for chemical vapor intrusion and non-*ASD mitigation* methods;
3. State, provincial, federal and, if applicable, local informational resources, to include websites or phone numbers; and
4. Contact information for service inquiries to include the name, address, phone number and email address of the service provider and relevant certification or license number(s) of the *qualified mitigation professional(s)* responsible for quality and standards compliance.

b) System descriptions

A description of the *mitigation* system(s) as installed shall be provided to include:

1. System components labeled on a floor plan sketch or portrayed in narrative that describes system components and locations.

2. Basic operating principles;
3. An estimation of annual operating costs; and
4. Fan equipment model(s) and startup parameters, including system monitor pressure gauge readings and any control settings that existed at the time *mitigation* goals were achieved.

c) Adverse or extenuating circumstances
A description shall be provided of important observations that have potential to adversely affect the *mitigation* system(s) or other building systems; and

d) Warranty/Guarantees
Information shall be provided regarding warranties, guarantees and related conditions or limitations that are consistent with proposals, as required in Sections 4.2 d, e, and f (Proposals).

e) Additional Retest Guidance
The following or equivalent guidance shall be provided in the information packet:
"Testing to verify continued effectiveness is to be conducted in conjunction with any sale of a building and after any of the following events occur:
- ✓ New adjoining additions, structures or parking lots;
- ✓ Building reconfiguration or rehabilitation
- ✓ A ground contact area not previously tested is occupied or a home is newly occupied;
- ✓ Heating or cooling systems are altered with changes to air distribution or pressure relationships;
- ✓ Ventilation is altered by extensive weatherization efforts;
- ✓ Sizable openings to soil occur due to:
  - — groundwater or slab surface water control systems or sewer lines are added or altered (e.g., sumps, drain tiles, shower/tub retrofits, etc.) or
  - — natural settlement causing major cracks to develop;
- ✓ Earthquakes, blasting, fracking, or formation of sink holes nearby; or
- ✓ An installed mitigation system is altered."

10.3 Non-*ASD* Methods

Regardless of whether the owner or an independent party is responsible for maintenance, an *OM&M* manual compliant with Section 10.5 shall be provided where non-*ASD mitigation* designs are employed.

10.4 Independent Maintenance

Where maintenance and monitoring of *mitigation* components are the responsibility of someone other than the occupants, the *contractor* shall provide the *client* a written *OM&M* manual after mitigation that complies with all provisions of Section 10.5.

10.5 OM&M Manuals

OM&M manuals shall include all content required in Section 10.2 for owner-occupied information packages. In addition, the *OM&M* manual shall comply with all portions Section 10.5 as published in the latest publication of ANSI/AARST SGM-MFLB. These provisions include Sections 10.5.1 (Stewardship/Monitoring), 10.5.2 (Historical Information), 10.5.3 (System components), 10.5.4 (Maintenance inspection checklists), 10.5.5 (Repairs), and 10.5.6 (Retention of OM&M records).

10.6 Inadvertent *Collateral Mitigation*

Where *mitigation* is not conducted in all attached units or *dwellings* in a shared building, both the following, or equivalent, statement and example notice in Figure 10.6 shall be prominently included with information packets and *OM&M* manuals to inform the *client* of inherent obligations to neighboring occupants:

> *"There are inherent obligations to occupants of adjoining dwellings regarding disclosure of elevated radon concentrations found and potential effects on adjoining dwellings as a result of the mitigation system.*
>
> *In accordance with the ANSI/AARST standards, mitigation firms are obligated to advise the client of inherent obligations to neighboring occupants.*
>
> *It is strongly recommended to distribute the following message in writing to occupants of adjoining dwellings and, if applicable, to the homeowner's association or management firm that provides stewardship for neighboring properties."*

Figure 10.6 **Example Notice to Neighboring Property Owners and Occupants**

From: _____

Elevated radon concentrations were found at (addresses): _____

A mitigation system [ ] has been installed, or [ ] is planned to be installed.

In the interest of health protection, we have been advised to provide you the following messages:

1) Test your home for radon — it's easy and inexpensive. Any building on any parcel of land can have a radon problem.
2) The radon reduction system installed or planned for installation in our dwelling can inadvertently move air and extend a vacuum under some adjoining units or dwellings with the intent to stop radon entry into your dwelling. It is recommended that occupants of adjoining units:
   a) Seek to maximize radon reductions and energy conservation by closing openings to soil (e.g., closed covers over sumps and large holes).
   b) Check for any adverse impacts such as flue gas spillage from combustion appliances.
3) We cannot warrant any degree of radon reductions, nor can we be responsible for maintaining radon reductions, maximizing energy conservation, or checking for unlikely yet possible environmental impacts for adjoining units.
   For additional guidance, it is recommended to contact the state or local radon office. Sources in the U.S. include the national radon hotline at 1-800-SOS-RADON (1-800-767-7236) and state radon offices that can be found at: https://www.epa.gov/radon/epa-map-radon-zones-and-supplemental-information#datainfo

11.0 HEALTH AND SAFETY

Advisory Notice

This document cannot address all health and safety concerns associated with *mitigation* installations. Users of this document are responsible for establishing and implementing appropriate safety practices and compliance with applicable federal, state, and local regulations relating to worker health and safety.

11.1 Safety Management Program

The *contractor* shall establish, maintain, and follow a written safety management program. The program shall address health hazards and safety for jobsite workers and others, as it specifically pertains to *mitigation* activities. Where worker safety regulators require review of worker safety programs, the *contractor* shall provide the safety management program and related records as required by federal or local jurisdictional authority.

11.1.1 *Resources*

The program policies shall address a means for making personal safety equipment available to all jobsite workers, including, but not limited to eye protection, hearing protection, respiratory protection, knee pads, fire extinguishers, hard hats, and steel-toe boots and protective gloves.

11.2 Safety Training

The safety management program shall address a means to inform and educate jobsite workers on safety practices and policies by way of educational courses or staff briefings.

Note

11.2.1 *Worker training*

Safety precautions reviewed no less than annually with all jobsite workers shall include discussion of:

a) Ventilation of work areas to reduce exposure to radon, radon decay products, hazardous vapors and other airborne hazards;

b) Safe use of all jobsite equipment including safe practices when using ladders or scaffolding, and identifying and avoiding electrical hazards;

c) Safety procedures, that should often include a buddy system, whenever conducting work in *crawl spaces*, confined spaces and where hazards exist from excavation, falling or heat exhaustion. This discussion to include symptoms and appropriate responses to heat exhaustion and Hantavirus;

d) Safety procedures prior to and while drilling through slabs, such as efforts to identify if there are utility lines below slabs or steel tendons within post-tension slabs;

e) Personal safety equipment, to include:

   1. Eye protection from flying dust and debris, such as during sawing and drilling;
   2. Ear protection from repetitious exposure to loud noise, such as generated by hammer drills;
   3. Respiratory tract protection from airborne particulates and biological hazards, such as masks to protect against airborne silica dust, organic vapors, asbestos, glass fibers and communicable diseases; and
   4. Protection against bodily harm by way of protective gloves, steel toe boots and hard hats; and

f) Safe driving practices, including parking and backing up at jobsites, and procedures to minimize harm that can result from repetitious muscle strain activity; and

g) Safety considerations relative occupational exposure to radon, chemical and hazardous gases, to include safety data sheets (SDS) and how to access SDS information related with hazardous compounds in products used during construction, such as caulk and glues or bonding products.

11.2.2 *Oversight training*

Person(s) physically onsite who are deemed responsible for overseeing jobsite, educational or briefing events shall additionally include, but not limited to, discussion of:

a) Stopping work until safe conditions can be secured;
b) Posting or providing notice for occupants regarding observed hazards;
c) Hazardous building conditions identified in Section 11.3; and
d) Responses to and reporting work-related accidents or illness.

11.3 Hazardous Building Conditions

In any planned work area where it is suspected that contaminants such as asbestos, lead paint, mold or other toxins exist, work shall be conducted in a manner that meets applicable regulations and maintains consideration for the health and safety of both workers and occupants.

11.3.1 *Asbestos*

In any planned work area where it is known or suspected that asbestos may exist and be disturbed, work shall not be conducted until an accredited asbestos inspector who, where applicable, is licensed by the state or local jurisdiction determines that such work will be undertaken in a manner that complies with applicable asbestos regulations.

Informative advisory—Deteriorating, damaged or disturbed asbestos-containing products can pose a serious health threat to occupants and workers. Asbestos-containing materials can include certain materials for insulation, fireproofing, acoustical materials, floor tiles and adhesives. Care should be taken to recognize that asbestos inspection reports do not always specify the location of asbestos and that previously hidden asbestos-containing materials that can be exposed during construction or renovations.

Note—The *client* should be notified that proper assessment and abatement procedures are to be followed as regulated by NESHAP, OSHA, the LSHR and state and local regulations for the protection of the health and safety of occupants, and *contractors*. For more information, see www.epa.gov/asbestos

11.3.2 *Lead-based paint*

Informative advisory—Common renovation activities such as sanding and demolition can create hazardous lead dust and chips, which can be harmful to adults and children.

Note 1—Any activity that disturbs paint (unless it is known by testing to not be lead-based paint) in pre-1978 target housing is subject to the EPA Lead Renovation, Repair and Painting (RRP) rule (40 CFR 745, Subparts E and Q). EPA has established the Lead-Safe Certification Program for contractors in response to this concern. For more information, see a reference such as www.epa.gov/getleadsafe

Note 2—In addition, all target housing that is federally owned and target housing receiving federal assistance fall under "The Lead Safe Housing Rule" (24 CFR Part 35 Subparts B through R). Please refer to Subpart R—Methods and Standards for Lead-Paint Hazard Evaluation and Hazard Reduction Activities (24 CFR Sections 35.1300 through 35.1355) for HUD specific methods and standards that would be applied for target housing. The Lead Safe Housing Rule and additional HUD information is available at www.hud.gov/healthyhomes .

11.3.3 *Flue gas spillage*

Clients and impacted residents shall be advised of *flue gas spillage* that is encountered during the course of *mitigation* activities. If *flue gas spillage* is observed to result from the *mitigation* system operation, the system shall be deactivated until the condition has been evaluated and corrected. In such event, the *client* or impacted resident shall be advised to contact an HVAC contractor or other qualified person to evaluate and correct *flue gas spillage* condition as well as to verify proper appliance installation and performance.

Note

11.4 Radon Mitigation

All jobsite workers physically installing radon *mitigation* systems shall be advised of occupational hazards of exposure to radon and the need to apply protective measures.

11.4.1 *Jobsite worker exposure to radon*

Where the purpose of *mitigation* includes *mitigation* of radon gas, the safety management program shall include a means to monitor each worker's exposure to *radon* at each work site based on:

a. The highest pre-*mitigation* indoor radon measurements; or

b. Actual jobsite measurements of radon or radon decay products; or

c. Measurements from a radon dosimeter such as an alpha track or comparable device consistently worn at the job site and stored in a low-radon environment during nonworking hours; or

d. As required by jurisdictions of authority.

11.4.2 *Radon exposure limits*

Jobsite worker exposure shall be limited to 4 working level months (WLM) or 400 pCi/L-Months (pCi/L-M) over any 12-month period in accordance with requirements in a) or b) of this Section 11.4.2.

Note—Less than 1 WLM or 100 pCi/L-M over any 12-month period is a recommended goal that is commonly met for concentrations jobsite workers typically encounter day to day.

a. WLM calculations shall be based upon the jobsite worker's exposure hours times the exposure concentration, as expressed in working level (WL) units of measurement. Working level hours (WLH) shall be derived from WL measurements multiplied times exposure hours. Ongoing totals of WLH shall be divided by 170 workhours/month to achieve working level months (WLM).

Table 11.4.2 a Example Spreadsheet Calculations (WLM)

	A	B	C	E		F	G
	Data Entry			*Calculations*			
0	Date	Hours	pCi/L	WL	WLH	WLM	TOTAL WLM: **0.038 WLM**
1	1/12/2021	8	32	0.32	2.56	0.015	
2	1/13/2021	4	5	0.05	0.20	0.0012	
3	1/13/2021	4	7	0.07	0.28	0.0016	**Total to not exceed 4 WLM in any 12-month period**
4	1/14/2021	8	10	0.10	0.80	0.0047	
5	1/15/2021	8	22	0.22	1.76	0.0104	
6	1/16/2021	4	22	0.22	0.88	0.0052	
				=pCi/L / 100	=WL * Hours	=WLH / 170	=(SUM) WLM
				If calculating 50% ER: =(pCi/L/100) * 0.5			

Note—The limits in this standard are based on 100% equilibrium ratio (ER). Where required to report WLM using 50% equilibrium ratio, the WL value or pCi/L-M value would be reduced by 50%.

b. Equivalent pCi/L-M calculations shall be based upon the jobsite worker's exposure hours times the exposure concentration expressed in *pCi/L* units of measurement. pCi/L- hours shall be derived from radon (pCi/L) measurements multiplied times exposure hours. Ongoing totals of pCi/L-hours shall be divided by 170 workhours/month to achieve picocurie months (pCi/L-M).

Table 11.4.2 b Example Spreadsheet Calculations (pCi/L-M)

	A	B	C	E	F	G
	Data Entry			*Calculations*		
0	Date	Hours	pCi/L	pCi/L-Hours	pCi/L-Months	Total pCi/L-Months: **3.81 pCi/L-M**
1	1/12/2021	8	32	256	1.5	
2	1/13/2021	4	5	20	0.12	
3	1/13/2021	4	7	38	0.16	**Total to not exceed 400 pCi/L-Months in any 12-month period**
4	1/14/2021	8	10	80	0.47	
5	1/15/2021	8	22	176	1.04	
6	1/16/2021	4	22	88	0.52	
				= pCi/L Hours	= pCi/L hours / 170	=(SUM) pCi/L-Months

11.5 Chemical Vapor Mitigation

11.5.1 *Chemical vapor Intrusion (VI)*

All jobsite workers physically installing systems intended to reduce occupant exposure to hazards from chemical vapors or other soil gas of concern shall be advised of occupational hazards from exposure to such substances and the need to apply protective measures when handling and controlling such hazardous substances. The health and safety program shall include additional educational courses or staff briefings that include review and discussion of a) and b) of this Section 11.5.1:

Note

a) Understanding chemical exposure scenarios.
Note—Three groups of people, or "receptors," can potentially be exposed to chemical contaminants at residential locations where *mitigation* systems are installed;

Informative Table 11.5 Chemical Exposure Scenarios
Summary of various exposure scenarios

Receptor (Persons)	Media to Which Exposed	Routes of Exposure	Common Exposure Durations	Hazards Related to Installations	Hazards Related to Frequency of Exposure
Mitigation Installers	Sub-slab soil	1. Dermal contact 2. Ingestion following hand-to-mouth 3. Inhalation of vapor / particulates 4. Ingestion of particulates	2 hr/event	Varies depending on chemicals present and materials used during system installation	Varies from one-time acute exposure to a series of acute exposures over many years (that can combine to result in a subchronic or chronic risk scenario)
	Indoor air	Inhalation of vapor and, to a lesser extent, particulates	6 hr/event		
Monitoring Events	Indoor air	Inhalation of vapor	1 hr/event		
Residents	Indoor air	Inhalation of vapor	12-24 hours/day	Short-term and dependent upon materials used during system installation	

b) Personal protection regarding contaminated soil, contaminated indoor air and explosive or fire hazard situations.

Note—For guidance, see:

— The NIOSH pocket guide to chemical hazards: www.cdc.gov/niosh/npg/ ;

— ATSDR (The Agency for Toxic Substances and Disease Registry) list of contaminants commonly encountered: www.atsdr.cdc.gov/SPL ; and

— For their minimal risk levels: www.atsdr.cdc.gov/mrls .

11.5.3 *Safety oversight*

Where the purpose of *mitigation* includes *mitigation* of chemical vapors or other soil gas of concern, the safety management program shall designate a person to oversee activities who is:

a) trained and qualified in OSHA's HAZWOPER requirements; and

b) authorized to stop work until safe conditions can be secured.

11.5.3.1 Jobsite Hazards

Prior to mitigating any structure for chemical vapor intrusion or explosive gas the *contractor* shall request in writing that the *client* provide a written statement confirming any need, or if there is not a need, for special considerations regarding site conditions and handling or control of hazardous substances, to include:

a) Worker Exposures (relative to maximum concentrations that workers should expect to encounter from inhalation, ingestion and dermal exposures to hazardous substances);

b) Handling of Toxic Soil and Groundwater (including groundwater that might be found in sump wells or intruding above slabs or into *crawl spaces*); and

c) Flammable or Explosive Gases or Vapors.

Informative advisory—The health and safety practices needed can depend on identifying known hazards at the jobsite(s). If the *client* does not furnish appropriate information and guidance related to known chemical or explosive gas hazards, the *contractor*, who is ultimately responsible for jobsite safety, is denied the capacity to institute safe practices.

11.5.3.2 OSHA Requirements

Informative advisory—OSHA mandates special requirements and worker training under certain circumstances. For guidance see:

— The attached Companion Guidance for Vapor Intrusion;

— OSHA HAZWOPER training requirements: https://www.osha.gov ; and

— OSHA requirements for "Permit-required confined spaces": OSHA's 29 CFR 1910.146, clause (c)(5)(ii)(C), on test, subclause (1), Oxygen content, (2), Flammable gases and vapors, and (3), Potential toxic air contaminants.

12.0 NON-*ASD* MITIGATION METHODS

All Non-*ASD mitigation* systems and methods shall comply with Section 12 of the most current publication of ANSI/AARST SGM-MFLB.

These provisions include Sections 12.1 (General), 12.2 (Sources for Air Delivered to a Building), 12.3 (Indoor Air Pressurization), 12.4 (Soil Air Pressurization), 12.5 (Indoor Air Dilution), 12.6 (Soil Air Dilution), 12.7 (Passive Methods and Systems), 12.8 (Air Cleaning), 12.9 (Water), 12.10 (Building Materials), and 12.11 (Source Removal).

13.0 NORMATIVE APPENDICES AND REFERENCES

13.1 National Certification/Listing Programs

For private sector certifications and listings, this standard requires a national program that evaluates and lists qualified individuals, training courses and other products or services, such as laboratory services, integral to achieving public health goals intended by this standard. Programs meeting the purpose, need and requirements of this standard are those with policies as established in a), b) and c) of this Section 13.1.

a) Programs with published policies that:
   1. require persons to undergo education and an impartial examination process prior to granting personal certification or certificates of educational achievement; and
   2. require surveillance of continued competence, not less than as demonstrated by continuing education on standards updates, compliance and other related technical knowledge and skills, prior to granting recertification or renewed certificates or listings; and
   3. require, for the certification of radon measurement laboratories, initial demonstration and scheduled ongoing surveillance of compliance with ANSI/AARST MS-QA (Radon Measurement Systems Quality Assurance).

b) Programs that:
   1. have a written policy and means for receiving and adjudicating complaints against individuals or companies who have been granted a credential; and
   2. have publicly published educational and examination requirements for each credential or listing available online where readily accessible for consumers of credentialed services.

c) Programs that include educational prerequisites as follow:
   1. Qualified Mitigation Professionals—Homes
      Certifications granted that qualify individuals as proficient in designing radon or soil gas *mitigation* systems in existing homes are to include:
      a. no less than 32 hours education prior to granting certification that focuses on tasks required in this standard, ANSI/AARST SGM-SF (Soil Gas Mitigation Standards for Existing Homes); and
      b. biennial recertifications after completing continuing education requirements and any other program surveillance activities.
   2. Qualified Radon Measurement Professional—Homes
      Certifications granted that qualify individuals as proficient in conducting radon measurements in existing homes are to include:
      a. no less than 16 hours education prior to granting certification that focuses on tasks required in ANSI/AARST MAH (Protocol for Conducting Measurements of Radon and Radon Decay Products in Homes); and
      b. biennial recertifications after completing continuing education requirements and any other program surveillance activities.

Informative Note 1—The National Radon Proficiency Program (NRPP), the National Radon Safety Board (NRSB), or equivalent programs that also meet requirements of a), b) and c) of this Section 13.1 meet the requirements of this standard.

Note that identification of existing certification bodies is not an endorsement of their programs.

Informative Note 2—The purpose of requirements in this Section 13.1 is to ensure contractors have an appropriate degree of technical, engineering, and scientific knowledge to protect occupants by successfully reducing hazards associated with *radon gas*, chemical vapors or other soil gases that are present in indoor air.

13.2 Normative References

Published by the AARST Consortium on National Standards
For the latest versions of AARST/ANSI documents, see: www.standards.aarst.org

ANSI/AARST MAH (Protocol for Conducting Measurements of Radon and Radon Decay Products in Homes)

ANSI/AARST SGM-MFLB (Soil Gas Mitigation in Existing Multifamily, School, Commercial and Mixed-Use Buildings)

Note—Previously published as ANSI/AARST RMS-MF and RMS-LB and now harmonized and consolidated into a single standard.

Published by the ASHREA
For the latest versions of ASHRAE documents see: www.ashrae.org

- 62.1 Ventilation for Acceptable Indoor Air Quality for buildings that are more than three stories tall (Appendix B—Separation of Exhaust Outlets and Outdoor Air Intakes)

Published by ASTM International
For the latest versions of ASTM documents see: www.astm.org

- C33 Standard Specification for Concrete Aggregates
- C920 Elastomeric Joint Sealants
- C1173 Flexible Transition Couplings for Underground Piping Systems
- D1785 Standard Specification for Poly(Vinyl Chloride) (PVC) Plastic Pipe, Schedules 40, 80, and 120
- D2564 Solvent Cements for Poly(Vinyl Chloride) (PVC) Plastic Piping Systems
- D2665 Poly(Vinyl Chloride) (PVC) Plastic Drain, Waste, and Vent Pipe and Fittings
- D5926 Poly (Vinyl Chloride) (PVC) Gaskets for Drain, Waste, and Vent (DWV), Sewer, Sanitary, and Storm Plumbing Systems
- E1745 Plastic Water Vapor Retarders Used in Contact with Soil or Granular Fill under Concrete Slabs
- F656 Primers for Use in Solvent Cement Joints of Poly(Vinyl Chloride) (PVC) Plastic Pipe and Fittings
- F891 Coextruded Poly(Vinyl Chloride) (PVC) Plastic Pipe With a Cellular Core
- F1488 Coextruded Composite Pipe
- D2787 Standard Practice for Classification of Soils for Engineering Purposes (Unified Soil Classification System)

Published by the International Code Council, Inc.
For the latest versions of ICC documents see: www.iccsafe.org

- The International Residential Code® (IRC)
- The International Building Code® (IBC)
- The International Mechanical Code® (IMC)
- The International Plumbing Code® (IPC)
- The International Energy Conservation Code (IECC)

14.0 DESCRIPTION OF TERMS

Terms not defined herein have their ordinary meaning within the context of their use as defined in "Webster's Collegiate Dictionary."

Accessible: Capable of being reached for operation, repair, and inspection.

Accessible, Readily (Readily Accessible): Capable of being reached quickly for operation, repair, or inspections without requiring those to whom ready access is requisite to take actions such as to use tools (other than keys), to climb over or under, to remove obstacles, or to resort to portable ladders, and so forth.

Active soil depressurization (ASD): A family of radon mitigation systems involving mechanically driven soil depressurization, including sub-slab depressurization (SSD), sub-membrane depressurization (SMD), block wall depressurization (BWD) and *crawl space* depressurization (CSD).

Backer rod: A semi-rigid closed-cell foam material resembling a rope (available in various diameters) that is used to fill around pipes, large cracks, etc. to assist in making a sealed penetration.

Becquerel per cubic meter (Bq/m³): A unit of measure for radioactivity in one cubic meter of air. CONVERSION: 1 Bq/m³ equals 0.027 picocuries per liter (*pCi/L*).

Chemicals of Concern (COC): Chemicals in vapor, liquids or soil that have been identified at a site location to potentially pose health and safety hazards.

Client: The person(s), or company that contracts with a *contractor* to install a mitigation system in a building.

Collateral mitigation: The ability to mitigate more than one occupied *dwelling* or unit with a single mitigation system.

Continuous Duty: A motor may be rated as either continuous duty or intermittent duty. Continuous duty rated motors are rated to be run continuously without any damage or reduction in life of the motor while intermittent duty motors must be allowed to stop and cool before restarting.

Contractor: Any person(s) or contracting firm regardless of organizational structure who installs a mitigation system. See Section 3 for descriptions of Qualified Mitigation Professionals.

Crawl space: A foundation type with an open area beneath the livable space of a *dwelling* that typically has either a concrete slab or earthen floor.

Cubic feet per minute (cfm): A measure of the flow rate of a fluid, such as air. CONVERSION: 1 cfm = 1.699 cubic meters/hour (m³/hr).

Depressurization: A negative pressure induced in one area relative to another.

Diagnostic procedures: One or multiple procedures for identifying or characterizing conditions under, beside and within buildings to project the effects of various system designs. Diagnostic procedures can include sub-slab pressure field extension tests or analysis; visual observations; characterization of pressure or air exchange rates between indoors and outdoors and also between floors or adjoining air spaces; and *diagnostic radon measurements* at locations of interest (e.g., common areas, mechanical spaces and spaces not in ground contact).

Diagnostic radon measurements: Diagnostic Radon Measurements are intended to confirm specific conditions or effects of mitigation activities. Test locations are identified by their relationship to the specific information being sought. Diagnostic Radon Measurements are not a substitute for testing in accordance with ANSI/AARST measurement protocols.

Dwelling: A building or portion of a building that is used, intended, or designed to be built, used, rented, leased, let, or hired out to be occupied or that are occupied for living purposes.

Feet per minute (fpm): A measure of the velocity rate of a fluid, such as air. CONVERSION: 1 fpm = 0.3048 meters per minute (0.3m/min).

Flue gas spillage: A condition in which the normal movement of combustion products up a flue (due to the buoyancy of the hot flue gases) is reversed, resulting in the combustion products entering the building. Flue gas spillage of combustion appliances (such as fireplaces and furnaces) can occur when *depressurization* in the house overwhelms the buoyant force of the hot gases. Flue gas spillage can also be caused by a blockage in the chimney or flue termination.

High-rise building: A building that is 75 feet (23 m) or higher.

HAC system: Heating and cooling (air conditioning) systems that are not designed to also supply outdoor air ventilation. HAC systems are common to single-family residences.

HVAC setback: HVAC "setback" is normally the automated or manual operation of system controls to cause different activity for heating, cooling and ventilation systems during occupied periods compared to unoccupied periods.

HVAC system: Heating and cooling (air conditioning) systems that are additionally capable of supplying outdoor air ventilation. If they do not supply outdoor air ventilation, they are more technically referred to as HAC systems.

Informative: Informational content or guidance that is not considered mandatory by this document.

Intentional collateral mitigation: *ASD* system(s) intentionally designed to reduce radon/soil gas concentrations in multiple *dwellings* that have each been identified by testing to indicate radon/soil gas concentrations that exceed acceptable limits.

Jurisdictional authorities: Governing authorities that regulate specific installation requirements or manner of activities will normally include a combination of authoritative bodies because of laws or other requirements adopted at a local municipality, county, province, or state. In addition, national jurisdiction will apply for a variety of activities that are regulated as a result of federal statutes. In some cases, tribal or international laws or treaties result in an authority that holds jurisdiction over certain activities.

Mechanically fastened: A means of connection such as for duct joints or electrical connections that entails more than a pressure fit, glued or twist connection (i.e., mechanical screws employed to secure connection of wiring or ducting).

Mitigation: System or steps to reduce radon concentrations or other pollutants in the indoor air of a building.

Mitigation Installer: A staff member or sub-contractor who participates in installation of the mitigation system(s) and therefore, regardless of qualifications or other obligations herein, is included in considerations for worker health and safety.

Nontransient: Occupancy of more than 31 days.

Normal occupied operating conditions: The operational condition for the building or unique sector of the building that exists during the greatest amount of significantly occupied time.

Normative: Provisions or referenced documents that state practices considered mandatory and required by this document.

Occupied: Any area of the building that is occupied on a regular basis for more than 4 hours a day. See "Significantly occupied" and "Occupied work or school weeks"

Occupied work or school weeks: Those weeks that do not include vacation days such as national or religious holidays, winter breaks or similar weeks where test conditions do not represent normal occupied operating conditions for the building. See "Normal Occupied Operating Condition", "Occupied" and "Significantly occupied".

Operation, Maintenance and Monitoring plan (OM&M): A document that includes information on the operation and maintenance of installed system(s) and guidance for monitoring the effectiveness of the system in the future.

Operations Manual: A document that is normally compiled by the mitigator to provide requirements and guidance for operation and maintenance of the mitigation system(s). This manual is a component of an Operation, Maintenance and Monitoring Plan (*OM&M*) that additionally includes information on monitoring effectiveness of the system.

Overseeing Professional: An individual or firm that aids to assemble and coordinate a qualified team of professionals of diverse skill sets.

Overseeing Team: Those individuals associate with project commissioning for vapor intrusion projects that normally include: Responsible Parties; Regulatory Authorities when compliance with local, state or federal regulatory standards is required; and An Overseeing Professional to assemble and coordinate a qualified team of professionals of diverse skill sets.

Picocurie per liter (pCi/L): A unit of concentration radioactivity corresponding to 0.037 decays per second or 2.22 decays per minute in a liter of air or water. 1 pCi/L = 37 becquerels per cubic meter (Bq/m^3).

Pressure field Extension (PFE): The distance that a pressure change, created by drawing soil-gas through a suction point, extends outward in a sub-slab gas permeable layer, under a membrane, behind a solid wall or in a hollow wall.

Pressure field Extension Test: A *diagnostic* procedure to evaluate the potential effectiveness of an ASD system by using a shop vacuum or other fan or vacuum device to draw air from the space below a slab or from the cavities inside a block wall. Measuring the change in pressure at various small test holes through the slab or the block wall using a micro-manometer or heatless smoke can provide evidence of the potential effectiveness of an *ASD* system.

Pressure Field Extension (PFE) Analysis: For *ASD* design and optimization, an analysis of 1) qualitative evidence for the distance potential of Pressure Field Extension, and 2) quantitative measurements employed for determining vacuum pressure and air flow volume rates required to achieve a consistent vacuum across the area observed.

Pressurization: A positive pressure induced in one area relative to another.

Quality Control: For mitigation professionals, actions to retain evidence of actual operational and installation quality that is compared to intended goals for quality. The comparison is systematically used to control quality with corrective actions as needed on a jobsite or for improvements to operational procedures.

Quality Management System (QMS): A documented plan of action, often described as a QA plan, which includes Quality Control Procedures for tracking the difference between planned actions and the actual resulting installation or product with systematic review for managing and improving quality.

Radon (Rn): A colorless, odorless, naturally occurring, radioactive, inert gaseous element formed by radioactive decay of radium-226 (Ra-226) atoms. The atomic number is 86. Although other isotopes of radon occur in nature, in this document, radon refers to the gas Rn-222. Rn-222 is measured in picocuries per liter (*pCi/L*) or in becquerels per cubic meter (Bq/m^3).

Re-entrainment: The unintended re-entry into a building of radon or soil gas that is being exhausted by a mitigation system.

Responsible Party (RP): Can be the property owner(s) or extend to include private businesses and/or governmental agencies

Sealed isolation assemblies: The surrounding physical components to an airspace that might include the entire building shell or an isolated airspace within a building that has been sealed to resist air movement between the isolated airspace and both indoor air and outdoor air.

Setback: See HVAC Setback.

Significantly occupied: The time period when the building is typically occupied by the majority of the workers or students. See "Normal Occupied Operating Condition", "Occupied", "Significantly occupied" and "Occupied work or school weeks".

Soil gas collection plenum: A 3-dimensional enclosure for collecting radon and other soil gases from under slabs, soil gas retarders or from behind walls that surrounds a void or gas permeable layer. There are at least six sides to this enclosed airspace, and none are perfectly sealed, especially at the side facing soil.

Suction pit: Space that exists or is created below the suction pipe.

Suction point: Location at which suction piping is routed through the slab, foundation, membrane, drain tile or sump cover.

Sump (Sump pit): A pit below the subsurface grade of a building, which is commonly intended as a component of a ground water control system. Sump pumps and drainage piping are often additional components of such ground water control systems.

Townhouse: A single family *dwelling* (also referred to as a townhome) that is constructed in a group of three or more attached units where each unit extends from the foundation to the roof and has a yard or public way on at least two sides.

Unique sector of a building: Portions of a common building that are individually classified by the general design and the intended design of each active heating, cooling, and ventilation system (HVAC).

Unit: A building or portion of a building that is used, intended, or designed to be built, used, rented, leased, let, or hired out to be occupied or that is occupied for commercial, residential or public purposes.

Working level (WL): Any combination of short-lived radon decay products in one liter of air that will result in the ultimate emission of 1.3 x 105 MeV of potential alpha energy. This number was chosen because it is approximately the alpha energy released from the decay products in equilibrium with 100 pCi of Ra-222. Exposures are measured in working level months (WLM).

Working Level Month (WLM): A unit of concentration radioactivity corresponding to 1 working level (WL) for 170 hours per month. Although this unit of measurement came from assuming 40-hour work week exposures, it is commonly used to set limits for annual exposure to radon decay product alpha energy.

Exhibit A
Sample Posted Notice: "CONTRACTOR TO OCCUPANTS"
Sealant Warning

Radon Company
Anytown, USA 800-000-0000

Dear Building Occupants,
Important steps are being taken to lower the risk to residents in this building.

The work has required **application of sealants.**

[✓] **Wet Caulk/Sealants**. Take care to not step in or touch sealants until they are dry.

[✓] **Vapor from sealants:** Common construction sealants used to prevent radon entry at foundations and other locations will normally emit vapors that contain modest amounts of certain chemicals generally referred to as volatile organic compounds. The emissions occur mostly during application, but also to a lesser extent as they dry to form an air-tight bond. While these chemicals are commonly used, some sensitive individuals may experience discomfort or other health effects when exposed to such chemicals.

Symptoms that may indicate sensitivity to these vapors may include nausea, headaches, dizziness, drowsiness and/or an allergic reaction. Special consideration should be made for the very young or elderly who cannot communicate symptoms experienced. **If symptoms are observed:** Leave the area immediately to breathe fresh air. Avoid further exposure. If symptoms persist, get medical attention.

We thank you for your cooperation in helping to ensure safe and healthy homes.

Sincerely,
Mitigation Company, Anytown, USA

Informative advisory—For all jobsites, including owner-occupied properties, it is recommended that the *contractor* post or leave similar notices for affected occupants when using sealants.

CONSENSUS BODY MEMBERS

Sincere appreciation is both expressed and deserved for years of contributions in time and wisdom provided by all the following consensus body members and staff.

Mitigation Standards—Consensus Body 2018-2022

***Note**—SGM-SF 2023 is dedicated to the memory of Steve Tucker who faithfully sought fairness and integrity in this work to, as a volunteer, find consensus agreement across what can often be very diverse points of view.*

Chair: Steve Tucker (OR) **Assistance Team:** Gary Hodgden (KS)

Stakeholder Group	Delegate	Affiliation
(Educators Rn)	Bill Angell (MN)	University of Minnesota
	Chad Robinson (KS) *Alternate*	Midwest University Radon Consortium (MURC)
(Regulated States Rn)	Josh Kerber (MN)	Minnesota Department of Health
	Patrick Daniels (IL) *Alternate*	Illinois Emergency Mgmt. Radon Program
(Federal EPA Rn)	Tommy Bowles (DC)	U.S. Environmental Protection Agency (EPA)
(Federal OHH)	Warren Friedman (DC)	HUD Office of Healthy Homes
(Proficiency Program)	Bruce Snead (KS)	AARST-NRPP (Policy Advisory Board)
	Kyle Hoylman (KY) *Alternate*	AARST-NRPP (Credentialing Committee)
(Measurement Prof. Rn)	Nate Burden (PA)	Professional Measurement Service Provider
	James Fraley (GA) *Alternate*	Professional Measurement Service Provider
(Home Mitigation Prof.)	Bill Brodhead (PA)	Professional Service Provider
	Aaron Fisher (PA) *Alternate*	Professional Service Provider
(Large Bldg. Mitigation)	Tony McDonald (OH)	Professional Service Provider
	Fred Elrott (CA) *Alternate*	Professional Service Provider
(VI Mitigation Prof.)	Tom Hatton (NJ)	Professional Service Provider
	Rachel Saari (MI) *Alternate*	Professional Service Provider
(Building Scientist)	Todd McAlary (CN)	Professional Service Provider
	Chris Ferguson (IN) *Alternate*	Professional Service Provider
(Site Assessment VI)	Chris Lutes (NC)	Professional Measurement Service Provider
	Chris Bonniwell (WI) *Alternate*	Professional Measurement Service Provider
(VI Stewardship VI)	David Gillay (IN)	Professional Legal Services
(Fan Manufacturers)	Dave Hill (MA)	Spruce
	Paul Owen (MA) *Alternate*	*Spruce*
(Ventilation Manufacturers)	Hamid Massali (KS)	Fantech
	Michelle Festa (PA) *Alternate*	Festa

Assist Team: Joanna Mandecki, Nanci Hermberger, Lindsey Beal, Denise Bleiler, Wensday Worth and Marilyn Patrick

SGM-SF Consensus Body 2014-2016

Chair: Dave Kapturowski (MA) **Assistance Team:** Gary Hodgden (KS)

Stakeholder Group	Delegate	Affiliation
(Educators)	Bill Angell (MN)	Midwest University Radon Consortium (MURC)
(Regulated States Rn)	Josh Kerber (MN)	Minnesota Department of Health
(Federal EPA Rn)	Jani Palmer (DC)	U.S. Environmental Protection Agency (EPA)
(Federal HUD)	Hilary Atkin (DC)	HUD Office of Housing
(Proficiency Program)	Kyle Hoylman (KY)	AARST-NRPP (Credentialing Committee)

(Proficiency Program)	Bruce Snead (KS) *Alternate*	AARST-NRPP (Policy Advisory Board)
(Mitigation Prof. Rn)	David Grammer (NJ)	Professional Service Provider
	Keith Volsted (IL) *Alternate*	Professional Service Provider
(Measurement Prof. Rn)	David Wilson (TN)	Oak Ridge National Laboratory
(Building Inspectors)	Nate Burden (PA)	Professional Service Provider
(Federal OHH)	Warren Friedman (DC)	HUD Office of Healthy Homes
	Eugene Pinzer (DC) *Alternate*	HUD Office of Healthy Homes
(Regional HUD)	Paul Mohr (MO)	HUD Field Representatives
	Sam Gieryn (MO) *Alternate*	HUD Field Representatives
(Federal HUD)	Nelson Rivera (DC)	HUD Community Planning and Development
	Danielle Schopp (DC) *Alternate*	HUD Community Planning and Development
(Manufacturers)	Paul Owen (MA)	Spruce Environmental
(Educators VI)	Kelly Pennell (KY)	University of Kentucky Dept. of Civil Engineering
(Regulated States VI)	David Swim (WI)	Wisconsin Department of Natural Resources
	Pat Troth (IN) *Alternate*	Indiana Dept. of Environmental Management
(Federal EPA VI)	Henry Schuver (DC)	EPA Office of Emergency Response (OSWER)
	Rich Kapuscinski (DC) *Alternate*	EPA Office of Emergency Response (OSWER)
(Mitigation Prof. VI)	Tony McDonald (OH)	Professional Service Provider
	Tom Hatton (NJ) *Alternate*	Professional Service Provider
(Building Scientist VI)	Rachel Saari (MI)	Professional Service Provider
	Robert Truesdale (NC*) Alternate*	RTI (Research Triangle Institute)
(Site Assessment VI)	Chris Lutes (NC)	Professional Service Provider
	Eric Lovenduski (NY) *Alternate*	Professional Service Provider
(Stewardship VI)	David Gillay (IN)	Professional Service Provider
	Chris Bonniwell (WI) *Alternate*	Professional Service Provider
(Regional EPA)	Michael Murphy (IL)	USEPA Region 5 (North-Central Region)
	Alana Lee (CA) *Alternate*	*USEPA Region 9 (Pacific-Southwest Region)*
(Public Health NGO VI)	Lenny Siegel (CA)	Center for Public Environmental Oversight

AARST CONSORTIUM

Companion Guidance

Advisory—The information contained in this guidance document is not part of this ANSI/AARST American National Standard (ANS) and does not contain requirements necessary for conformance to the SGM-SF standard. The information contained in this guidance document has not been processed in accordance with ANSI's requirements for an ANS. As such, this guidance document may contain material that has not been subjected to public review or a consensus process.

1.0 SCOPE

2.0 APPLICABILITY

3.0 QUALIFIED CONTRACTORS

3.4 Quality Management

BACK

Advisory—Be it a single person or a large firm, the more work you do, the more valuable quality management becomes. For managing quality, one compares procedures and jobsite data (input) to successes and failures (output).

- Input information includes written procedures for staff member roles and responsibilities, standards, codes, customer satisfaction and worker safety.
- The output results are tracked (e.g., retest results, standards compliance, and customer satisfaction).
- The comparison identifies actions necessary to improve procedures and installation quality.

5.0 SYSTEM DESIGN

5.1 Appropriate Systems

5.1.1 *General principles*

BACK

d) Unnecessary Noise

Informative advisory—Choices and actions that minimize objectionable unnecessary noise should be part of design and installation for each system. Where noise is both objectionable and unnecessary, actions should be taken to reduce unnecessary noise to the extent practicable.

5.2 Nondestructive Investigation

BACK

Informative advisory—It is recommended that the qualified mitigation professional review all available measurements of radon or soil gas, construction drawings, specifications and other information regarding the building that might be of value in determining the mitigation strategy.

5.2.1 *Diagrams*

BACK

Diagrams or sketches may be accompanied with narrative and photographic documentation.

5.2.2.1 Exterior Visual Inspection

BACK

Note—Walking the exterior helps to ensure all portions of the building are accounted for and allows visual evaluation for ground water erosion or settlement of soil below portions of the structure.

5.2.2.2 Interior Visual Inspection

BACK

d) Openings to soil

Important examples include:

(1) under showers or tubs,
(2) open blocks in the tops of (CMU) block walls;
(3) sizable openings or multiple gaps in walls that adjoin soil,
(4) channel drains adjoining foundation walls, and
(5) exposed earth.

e) 1. Sumps

BACK

Important sump details include:

(1) If not open to adjoining soil aggregates that are permeable,
(2) If connected to exterior drain-tile,
(3) If designed to capture surface water, and
(4) Uncommon or backup means for draining or ejecting water from the pit.

5.2.2.2

e) 2. Surface water drainage

BACK

A few examples where custom solutions might be needed:

(1) Existing drain system not designed to accommodate a laundry machines, or

(2) Water drainage systems that may need to be closed, isolated, or depressurized.

f) Safety concerns

BACK

A few examples of safety concerns that may warrant precautions:

(1) Hazardous confined spaces,

(2) Observations of suspected friable asbestos and

(3) Flue gas spillage.

5.2.2.2 Interior Visual Inspection

BACK

Note—Walking ground-contact areas is also a good time to consider custom solutions, such as additional suction points that could be needed for addressing other radon or soil gas source areas not initially targeted.

5.3.5 *ASD diagnostic PFE analysis*

b. PFE Vacuum (Quantitative)

BACK

Note—These measurements identify the vacuum strength needed to overcome resistance posed by fill materials within the soil gas collection plenum and indoor air pressures, including as they change across seasons.

c. Exhaust Air Volume (Quantitative)

BACK

Note—A balance between both vacuum and airflow is needed for effective systems. The airflow rate needed to overcome leakage between soil and indoor or outdoor air tells you how to choose piping sizing and fan flowrate capacities.

See informational guidance for Section 6.3.8 (Airflow velocities) relative to consequences of ignoring flowrate.

Figure 5.5-a ASD Method—Example PFE Analysis Flowchart

Process of Elimination

BACK

When PFE is poor or post-mitigation indoor testing fails to meet mitigation goals, a process of elimination is used to identify the cause and cure.

The first step typically includes checking for basic functional problems and evaluation for the extent of PFE achieved (i.e., distance across targeted slabs or membranes). As the first step in the process of elimination, this evaluation dictates where to focus attention.

Examples include:

1) If poor PFE across a large portion of the targeted area, the focus is to prominently enhance PFE across the targeted area.

2) If there is good PFE across most of the targeted area, the focus is on other soil gas sources, such as other ground-contact areas or drains open to soil.

Understanding Permeability

Hydraulic Conductivity (water and air)

Range of Hydraulic Conductivity of Natural Soils			
USCS Class	**Soil Type**	**Hydraulic Conductivity Range** gallons per day/ft^2	**Permeability description**
GP	Uniform gravel	4,000 to 20,000	High
GW	Well-graded gravel	1,000 to 6,000	Moderate to high
SP	Uniform sand	100 to 4,000	Moderate to high
SW	Well-graded sand	20 to 2,000	Low to moderate
SM	Silty sand	20 to 100	Low
SC	Clayey sand	20 to 20	Low to very low
ML	Silt	1 to 2	Very low
CL	Clay	0.02 to 0.2	Very low to impermeable

Note—This table helps illustrate the relative differences you can encounter that dictate the ease of extending a vacuum across distances. Those highlighted with gray present challenges in achieving PFE.

Unified Soil Classification System (USCS) ASTM D 2487

MAJOR DIVISIONS			SYMBOLS	TYPICAL NAMES
COARSE-GRAINED SOILS OVER 50% > No.200 SIEVE SIZE	GRAVELS MORE THAN 1/2 OF COARSE FRACTION > No.4 SIEVE SIZE	CLEAN GRAVELS WITH LESS THAN 5% FINES	GW	Well-graded gravels or gravel-sand mixtures, little or no fines
			GP	Poorly graded gravels or gravel-sand mixtures, little or no fines
		GRAVELS WITH OVER 15% FINES	GM	Silty gravels, gravel-sand mixtures
			GC	Clayey gravels, gravel-sand-clay mixtures
	SANDS MORE THAN 1/2 OF COARSE FRACTION < No.4 SIEVE SIZE	CLEAN SANDS WITH LESS THAN 5% FINES	SW	Well-graded sand or gravelly sands, little or no fines
			SP	Poorly graded sands or gravelly sands, little or no fines
		SANDS WITH OVER 15% FINES	SM	Silty sand, sand-silt mixtures
			SC	Clayey sands, sand-clay mixtures
FINE-GRAINED SOILS OVER 50% < No.200 SIEVE SIZE	SILTS & CLAYS LIQUID LIMIT 50% OR LESS		ML	Inorganic silts and very fine sands, rock flour, silty or clayey fine sands or clayey silts with slight plasticity
			CL	Inorganic clays of low to medium plasticity, gravelly clays, sandy clays, silty clays, lean clays
			OL	Organic silts and organic silty clays of low plasticity
	SILTS & CLAYS LIQUID LIMIT GREATER THAN 50%		MH	Inorganic silts, micaceous or diatomaceous fine sandy or silty soils, elastic silts
			CH	Inorganic clays of high plasticity, fat clays
			OH	Organic clays of medium to high plasticity, organic silty clays, organic silts
HIGHLY ORGANIC SOILS			PT	Peat and other highly organic soils

Note—A more detailed perspective. Those highlighted with gray present challenges in achieving PFE.

BACK

Visual Indications of Permeability The size of pores between stones or soil fragments indicate how permeable that aggregate is. However, one should not assume permeable or non-permeable conditions witnessed are uniform across any targeted area.	
	Gravel or crushed stone Abundant hydraulic conductivity exists with 3/4-inch stones.
	Gravels with fine sand, silt or expansive clay filling the pores between stones present challenges in achieving PFE.
	Sands and fine gravels Open pores between sand granules or stones indicate permeable aggregates. Larger exposed aggregate surfaces in pits likely needed.
	Sands that contain more than 10% fine sand, silt, and clay present challenges in achieving PFE.
	Soils An example where PFE is often enhanced by larger pits that expose more pore openings between soil aggregate fragments.
	Expansive soils or soils that contain more than 35% sand, fines, clay, and silt present challenges in achieving PFE.
	Solid clay is impervious to air movement. Note—One makeshift way to help identify expansive soils and clay is to roll a handful of soil in your hands to see how well it clumps together.

BACK

Optimize Soil Gas Transfer to Pipe Inlets

Where the total size of the pores exposed in a suction pit represents an open area smaller than the open end of a suction pipe, soil gas transfer and system airflow are inhibited.

Duct pipe size	Gravel Open face of gravel for pits with a 4" (10 cm) layer of gravel.	Sand Open face of sand for pits with a 4" (10 cm) layer of sand.	Soil Open face of soil when creating pits at various depths in soil.
	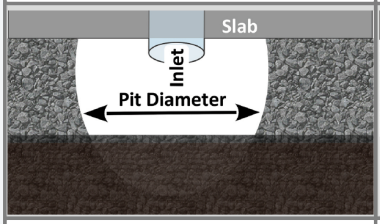	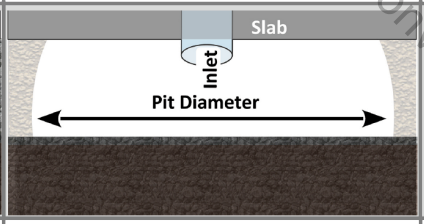	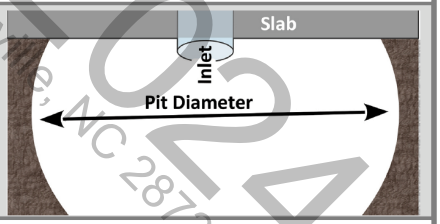
	Recommended Minimum	*Recommended Minimum*	*Recommended Minimum*
3" (7.6 cm)	≥ 12" diameter pit (10 cm x 30 cm)	≥ 36" diameter pit (10 cm x 30 cm)	The void needed may require extracting 5 to 7.5 US gallons (19-28 L) of sub-slab soil aggregate.
4" (10.2 cm)	≥ 16" diameter pit (10 cm x 33 cm)	≥ 48" diameter pit (10 cm x 33 cm)	Note—For most soils, PFE distances directly under a slab are not often increased by excavating more than 7.5 gallons.
6" (15.2 cm)	≥ 24" diameter pit (10 cm x 61 cm)	≥ 72" diameter pit (10 cm x 61 cm)	

Seasonal Compensation

The Goal: An installed ASD system that continuously controls the destination of soil gas with an appropriate degree of care to not compromise other building systems and health of occupants.

General: Inducing a negative pressure difference of about 1 pascal (4/1000-inch water column) within soil gas relative to indoor air is commonly witnessed to successfully reduce radon entry for most, if not all year. This is partly because even zero pressure difference reduces soil gas entry. However, the season when these measurements are conducted can make a critical difference.

As outdoor air grows colder than indoor air seasonally, the negative pressure indoors grows both stronger and consistent day and night. This pressure that brings soil gas into homes is competing with ASD fan induced air pressure.

Cold weather example: During coldest weather, even barely detectable PFE sometimes witnessed in challenging structures does not usually need additional protective buffer. If success is confirmed by indoor measurements under these conditions, one can expect that fan induced PFE will be stronger in mild weather.

One cold weather example of concern: If during cold weather a strong vacuum such as 5 pascals (20/1000-inch water column) is applied, PFE vacuums are expected to increase in mild weather. With studies showing that about 40-50% of ASD exhaust air is often coming from within the building, high vacuum ASD systems with robust airflows increase the likelihood of unnecessary energy penalties and compromised building systems such as inducing flue gas spillage at combustion appliances.

Mild weather concern for seasonal compensation: When PFE measurements are made in mild weather, the amount of increased indoor negative pressure during cold weather is an unknown commodity. If negative pressure internal to the building during cold weather increases to overwhelm PFE witnessed, the system or portion of the system will temporarily cease to stop soil gas entry. As a protective buffer for this situation, seasoned professionals often seek to achieve about 2.5 pascal (10/1000-inch water column) pressure difference in mild weather, whenever possible.

In addition: Soil gas sources not targeted, such as other adjoining slabs, may only experience substantial soil gas entry during colder weather or other periods of stronger negative indoor air pressure.

Verification: Actual confirmation of adequacy would require testing under varied seasonal conditions.

Buildings larger than a house: Larger or taller structures can generate stronger fluctuations of indoor negative pressure in response to seasonal weather. Larger buildings also often have more complex HVAC systems that can induce significant negative pressure indoors. These are considerations to account for in system design.

6.0 ACTIVE SOIL DEPRESSURIZATION (ASD)

6.1 *ASD* Suction Points

6.1.1 *Suction pits*

BACK

Informative advisory—Where sub-slab material exhibits poor permeability, larger pits are recommended, such as 1 ft^3 (28 dm^3) or larger. This void equates to 7.5 US gallons (28 L) or more of sub-slab aggregate.

Note—Pit size needs are based on permeability of the sub-slab material. If the combined surface area of exposed pore openings between granules of soil, sand or gravel is less than the cross-sectional area dimension of the suction pipe intake opening, a larger pit will likely enhance PFE.

6.1.2 *Sumps*

6.1.2.1 Seal the Suction Point (sumps)

BACK

Informative advisory—Sumps that connect to soil air should not be used as the primary suction point unless other options are inadequate for achieving PFE. Concerns include compromised accessibility to pumps, increased noise, and some localities disallow use of a sump as the primary suction point.

6.1.2.2 Accessibility to Sumps

BACK

Informative advisories

(1) The suction pipe should not extend lower than 1 inch below the sump lid.

(2) Visual access to conditions in the pit is recommended.

(3) Flexible coupling disconnects should be located such as to facilitate easy removal of the cover.

6.1.3 *Sub-membrane suction points*

BACK

Informative advisories

(1) It is recommended to attach at least 3 feet (1 m) of perforated pipe to suction pipe air intakes. This helps prevent membrane material from obstructing the air intakes.

(2) At least 10 feet (3 m) of perforated pipe is recommended where conditions might restrict PFE, such as where membrane material might adhere to moist soil. Geotextile matting can also achieve the intent of this recommendation.

(3) For large membranes, longer lengths of perforated pipe or multiple suction points are recommended.

6.1.4 *Non-habitable air spaces*

BACK

Note—This type of ASD system depressurizes an entire airspace that is not used or constructed for habitation. Examples include crawl spaces, utility tunnels, under raised flooring, behind partitioned walls and sometimes entire rooms.

6.1.4.2 Restricted Use

BACK

Informative advisory—Sub-membrane depressurization (SMD) for open earth crawl spaces is a preferred mitigation method to minimize energy penalties and damage to building components, even if access needs to be created.

6.1.5 *Block walls*

6.1.5.2 Sealing (block walls)

BACK

Informative advisory—If the top or wall surfaces of the void network cannot be closed to resist air entry into the voids, depressurization of the block wall(s) may not be possible. Where openings are not accessible, closure of voids in a course of blocks below the inaccessible openings at a location above outside grade should be considered to isolate a smaller void network for depressurization.

6.2 *ASD* Piping

6.2.7 *Secure duct piping*

6.2.7.2 Supports

BACK

Informative advisory—Where exposed, such as in basements and attics, pipe lengths that can move laterally or vertically are commonly witnessed to cause failed or leaking joint connections. This is known to occur merely as the result of occupants or workers jarring or bumping into pipes, or by natural forces such as wind.

6.2.8 *Provide access clearance*

BACK

CODE EXAMPLE

EQUIPMENT LOCATION AND CLEARANCES

"Working space and clearances. Access and working space shall be provided and maintained around all electrical equipment to permit ready and safe operation and maintenance of such equipment in accordance with this section and Figure E3405.1.

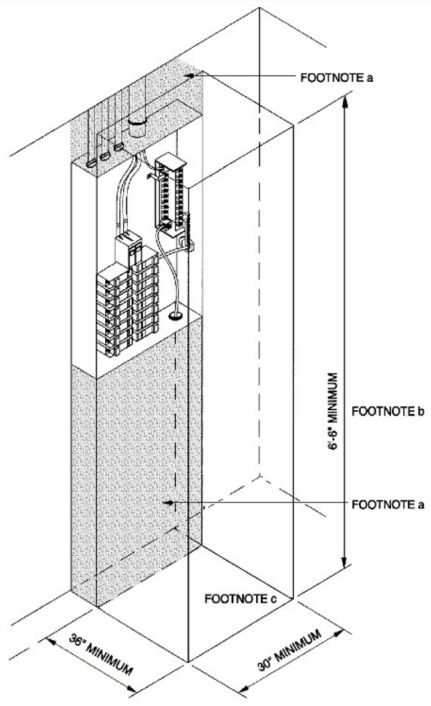

a) Equipment, piping and ducts foreign to the electrical installation shall not be placed in the shaded areas extending from the floor to a height of 6 feet above the panelboard enclosure, or to the structural ceiling, whichever is lower.

b) The working space shall be clear and unobstructed from the floor to a height of 6 feet or the height of the equipment, whichever is greater.

c) The working space shall not be designed for storage.

d) Panelboards, service equipment and similar enclosures shall not be location in bathrooms, toilet rooms, clothes closets or over the steps of a stairway."

Advisory—The clearance distances shown are 36 inches deep and 30 inches wide.

FIGURE 3405.1 WORKING SPACE AND CLEARANCES

6.2.9 *Protect ducts from the elements (insulation)*

BACK

Freeze-up and pipe drip in wet or humid climates (e.g., East of the Continental Divide).

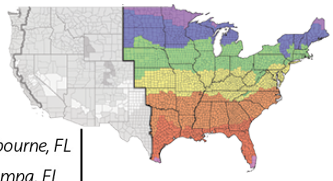

	Zone 8 Subarctic	Zone 7 Very Cold	Zone 6 Cold	Zone 5 Cool	Zone 4 Mixed	Zone 3 Warm	Zone 2 Hot	Zone 1 Very Hot	Acutely Hot
	Fairbanks	*Caribou ME* *Quebec* *Marquette MI* *Duluth MN* *Winnipeg* *Grand Forks* *Anchorage* *Breckenridge* *Aspen*	*Portland ME* *Buffalo NY* *Burlington NH* *Milwaukee* *Minneapolis* *Bismarck ND* *Pierre SD* *Cheyenne WY* *Billings MT* *Helena MT*	*Boston* *Albany NY* *Pittsburgh PA* *Cleveland* *Indianapolis* *Chicago* *Omaha* *Denver* *Albuquerque* *Salt Lake* *Reno, NV* *Boise, ID*	*New York, NY* *Philadelphia* *Richmond, VA* *Baltimore* *Louisville* *Cincinnati* *Nashville* *Saint Louis* *Kansas City* *Amarillo TX* *Portland, OR* *Seattle*	*Atlanta* *Charlotte, SC* *Birmingham AL* *Jackson, MS* *Memphis* *Little Rock* *Dallas* *Austin* *Las Vegas* *San Francisco* *Los Angeles* *San Diego*	*Melbourne, FL* *Tampa, FL* *Mobile, AL* *New Orleans* *Houston* *Brownsville* *Phoenix* *Tucson*	*Miami, FL* *Puerto Rico* *Virgin Islands* *Honolulu* *Guam*	*Certain Asiatic Regions*
Annual Average Outdoor Temperatures	**27 F** (-3 C)	**39 F** (4 C)	**45 F** (7 C)	**49 F** (9 C)	**55 F** (13 C)	**62 F** (17 C)	**69 F** (21 C)	**76 F** (24 C)	**83 F** (28 C)
% of year	100%	83%	75%	75%	66%	58%	42%	50%	100%
Heating	< Freezing								
Cooling		16%	25%	25%	16%	25%	42%	50%	100%
Neither					16%	16%	16%		

Avg. Low Winter Temps	Zone 8	Zone 7	Zone 6	Zone 5	Zone 4	Zone 3	Zone 2	Zone 1	Acute
	Dec/Jan/Feb	*Dec/Jan/Feb*	*Dec/Jan/Feb*	*Dec/Jan/Feb*	*Dec/Jan/Feb*	*Dec/Jan/Feb*	*Dec/Jan/Feb*	*Dec/Jan/Feb*	*Dec/Jan/Feb*
	-6 F (-21 C)	**2 F** (-17 C)	**9 F** (-12 C)	**17 F** (-8 C)	**26 F** (-3 C)	**35 F** (2 C)	**45 F** (7 C)	**61 F** (16 C)	**76 F** (24 C)

Avg. Daytime Summer Temps	Zone 8	Zone 7	Zone 6	Zone 5	Zone 4	Zone 3	Zone 2	Zone 1	Acute
	Jun/Jul/Aug	*Jun/Jul/Aug*	*Jun/Jul/Aug*	*Jun/Jul/Aug*	*Jun/Jul/Aug*	*Jun/Jul/Aug*	*Jun/Jul/Aug*	*Jun/Jul/Aug*	*Jun/Jul/Aug*
	65 F (18 C)	**72 F** (22 C)	**76 F** (24 C)	**77 F** (25 C)	**80 F** (27 C)	**83 F** (28 C)	**86 F** (30 C)	**86 F** (30 C)	**89 F** (32 C)

Concerns for freeze up (wet climate zones 6, 7 and 8)

The "average low winter" outdoor temperature across Dec-Jan-Feb, for climate zones 6, 7 and 8, includes cold spells likely to occur each year that are ≥10 degrees F colder than this "average low" temperature. Icing in wet climates typically begins wherever the inner wall surfaces of piping, rain caps and fans, normally kept above 32 F (0˚ C) by contact with warmer < 50 F (10 C) soil gas, have fallen to below freezing temperatures. Freeze up is likely in wet climates within days or weeks of exposure to less than ~ 0˚ F (-18 C) outdoor temperatures.

Concerns for drip on outer pipe surface (humid climate Zones 1 and 2)

The "average daytime summer" outdoor temperature across Jun-Jul-Aug, for zones 1 and 2 includes hot/humid spells that occur each year to cause prolonged periods of condensation drip from the outer surfaces of piping. This condensation occurs where cooler soil gas, often < 50 F (10 C) within piping keeps the outer pipe surfaces colder than the adjoining hot/humid outdoor air.

6.2.10 *Observe codes*

BACK

Informative advisory—Codes that impact choices for pipe routing include but are not limited to:

a) **Codes intended to maintain the integrity of building structural members.**
These codes place limits on the extent and location for sawing, notching and boring holes in a building's structural support members. In example, codes normally prohibit:
   1. notches in solid wood joists, rafters, and beams within the middle 1/3rd of its span and notches greater than 1/6th of its width, and
   2. holes that are closer than 2 inches to the top or bottom of solid wood members;

b) **Fire codes intended to inhibit the spread of fire and smoke.**
For example, national codes normally prohibit flammable materials such as plastic pipe from:
   1. touching or being too close to heat sources to include flues and chimneys,
   2. compromising fire/smoke barriers between floors (e.g., metal barriers in flue chases), and
   3. penetrating a fire-rated assembly unless specific procedures are taken, such as installing fire collars to control the spread of fire and smoke (e.g., a garage wall or ceiling if constructed as a fire-rated component and at penetrations into upper floor dwellings); and

c) **Codes and local utility company restrictions regarding proximity of piping and electrical components that could:**
   1. inhibit access for inspection and repairs, and
   2. be ignition sources for flammable materials (such as an electrical switch that is located near natural gas meters and liquid propane or gasoline holding tanks).

Inhibit the spread of fire and smoke

BACK

CODE EXAMPLES—INHIBIT THE SPREAD OF FIRE AND SMOKE

This portion of the publication reproduces selected sections from the 2015 edition of the International Residential Code (IRC), International Code Council, Inc., Falls Church, Virginia. Reproduced with permission. All rights reserved

Penetrations of firestops and draftstops.
"Penetrations through fire blocking and draftstopping shall be protected in an approved manner to maintain the integrity of the element penetrated."

(Guidance example—Where an existing wall and/or ceiling assembly constitutes fire-rated separation, such as between a garage and living space or between floors of multifamily dwellings, pipe penetrations are to be configured to retain the existing fire-rated separation. Fire collars at pipe penetrations are commonly employed to meet this need.)

Chimney clearances.
"Any portion of a masonry chimney located in the interior of the building or within the exterior wall of the building shall have a minimum airspace clearance to combustibles of 2 inches (51 mm). Chimneys located entirely outside the exterior walls of the building, including chimneys that pass through the soffit or cornice, shall have a minimum airspace clearance of 1 inch (25 mm). The air space shall not be filled, except to provide fire blocking in accordance with Section R1003.19."

Gas meter clearance

BACK

Gas meter clearance.
(Guidance example—A 36-inch (1 m) radius distance from natural gas meters is commonly required by utility company restrictions and some local codes relative to:
1. *Distance away for electrical plugs, switches, or other potential source of ignition, and*
2. *Clearance needed for meter maintenance.*

CODE EXAMPLE—CUTTING, NOTCHING AND DRILLING

This portion of the publication reproduces selected sections from the 2015 edition of the International Residential Code (IRC), International Code Council, Inc., Falls Church, Virginia. Reproduced with permission. All rights reserved.

Sawn lumber

"Notches in solid lumber joists, rafters and beams shall not exceed one-sixth of the depth of the member, shall not be longer than one-third of the depth of the member and shall not be located in the middle one-third of the span."

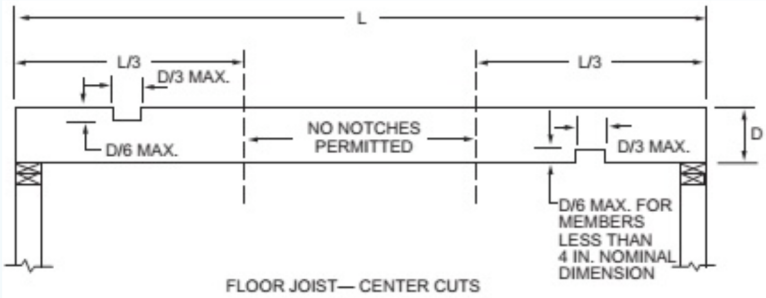

FLOOR JOIST— CENTER CUTS

"Notches at the ends of the member shall not exceed one-fourth the depth of the member. The tension side of members 4 inches (102 mm) or greater in nominal thickness shall not be notched except at the ends of the members. The diameter of holes bored or cut into members shall not exceed one-third the depth of the member.

Holes shall not be closer than 2 inches (51 mm) to the top or bottom of the member, or to any other hole located in the member. Where the member is also notched, the hole shall not be closer than 2 inches (51 mm) to the notch."

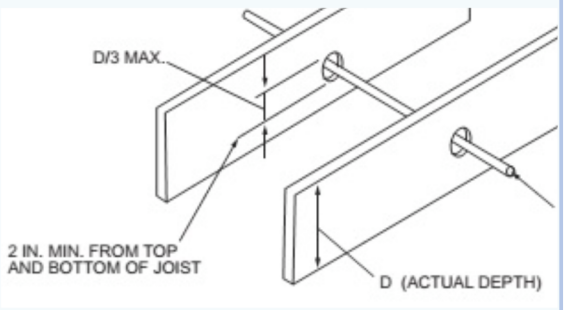

Engineered wood products.

"Cuts, notches and holes bored in trusses, structural composite lumber, structural glue-laminated members, cross-laminated timber members or I-joists are prohibited except where permitted by the manufacturer's recommendations or where the effects of such alterations are specifically considered in the design of the member by a registered design professional."

Drilling and notching of top plate.

"When piping or ductwork is placed in or partly in an exterior wall or interior load-bearing wall, necessitating cutting, drilling or notching of the top plate by more than 50 percent of its width, a galvanized metal tie of not less than 0.054inch thick (1.37mm) (16ga) and 1½ inches (38mm) wide shall be fastened across and to the plate at each side of the opening with not less than eight 16d (0.128 inch diameter) nails having a minimum length of 1½ inches (38mm) at each side or equivalent. See Figure R602.6.1.

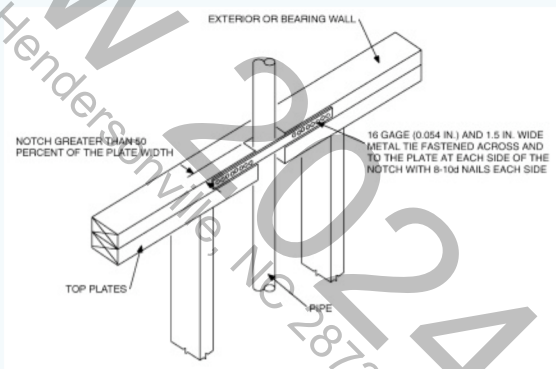

Exception: When the entire side of the wall with the notch or cut is covered by wood structural panel sheathing".

6.3 *ASD* Pipe Sizing

6.3.4 *Equivalent cross-sectional area*

BACK

Example of multiple smaller pipes joined in parallel to a larger exhaust pipe

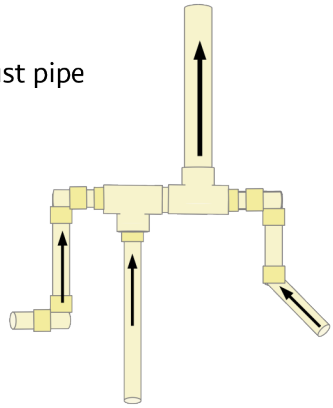

Note—Three 2-inch (50-mm) pipes in parallel are necessary to meet this requirement when connecting to a single 3-inch pipe

6.3.8 *Air velocities*

BACK

Informative advisory 1—Maximum airflow speed

Air speed/velocity within duct piping should be less than 2,000 feet per minute (fpm) (610 m/min) to prevent condensed vapor from being drawn upward within piping rather than naturally falling by virtue of gravity to its intended destination (e.g., soil).

In addition, air rushing noise will usually reach an objectionable threshold at ASD exhaust locations with air velocities of about 1,600 fpm (488 m/min) or faster.

- **Air velocities of 1,600 fpm (488 m/min) result when air is driven at:**
  - a) 80 cfm (2.3 m^3/min) through: 3-inch (75-mm) pipe or 3 x 4 inch (75 x 100 mm) downspout
  - b) 140 cfm (4.0 m^3/min) through: 4-inch (100-mm) pipe or 4 x 5 inch (100 x 127 mm) downspout
  - c) 315 cfm (8.9 m^3/min) through: 6-inch (150-mm) pipe or 5 x 6 inch (127 x 152 mm) downspout
  - d) 35 cfm (1.0 m^3/min) through: 2-inch (50-mm) pipe or 2 x 3 inch (50 x 75 mm) downspout

Informative advisory 2—Minimum airflow speed

Air speed/velocity at the system exhaust that is much lower than 300 feet per minute (fpm) (92 m/min) should be considered a benchmark that might indicate:

- more work to enhance PFE may be needed to achieve mitigation goals;
- enhanced expectations of exhaust icing or freeze-up during extreme cold weather;
- expectations of premature fan failure, if the cause is poor PFE; or
- a high vacuum fan is not aiding PFE but may cause adverse effects, such forcing liquid from U-tube manometers or forcing sand under the building out the exhaust of a system.

- **300 fpm (92 m/min) equates to:**
  - a) 20 cfm (0.6 m^3/min) through a 3-inch (75-mm) pipe;
  - b) 26 cfm (0.7 m^3/min) through a 4-inch (100-mm) pipe;
  - c) 60 cfm (0.7 m^3/min) through a 6-inch (150-mm) pipe; and
  - d) 9 cfm (0.2 m^3/min) through a 2-inch (50-mm) pipe.

6.4 ASD Exhaust Discharge

6.4.6 *Separation from operable openings in structures* (approximate distances)

BACK

Gable End

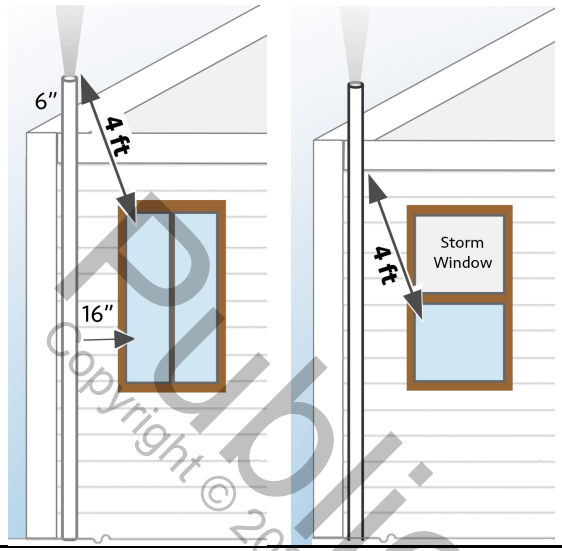

Distance requirements mimimize the duration of events where discharged air containing radon and other airborn contaminants might enter a building. The primary concerns are portions of windows operated for ventilation with outdoor air (as in gable end grapic).

Blowing discharged air away from the building and any ventilation opening is critical.

Meanhile, during times of slow outdoor wind, even slowly exhausted air can enter ventilation openings within 4 feet any direction away from the point of exhaust.

Graphics portray how to maintain 4-foot distances while retaining sensible designs.

Around Eave

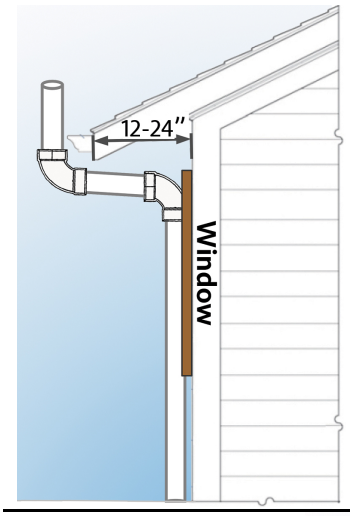

24" Eave

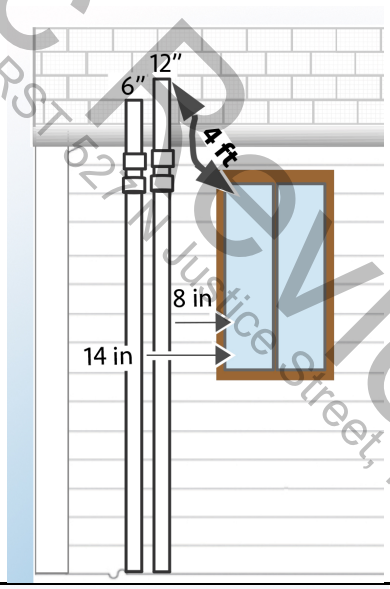

16" Eave

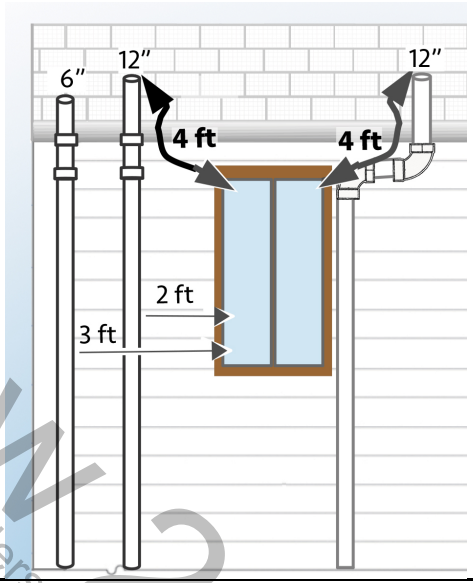

No Eave

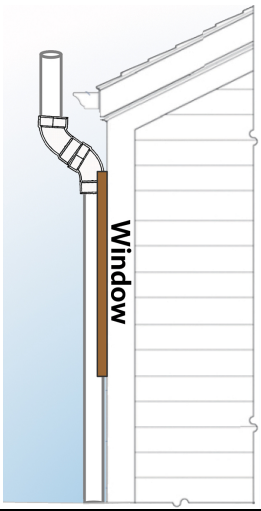

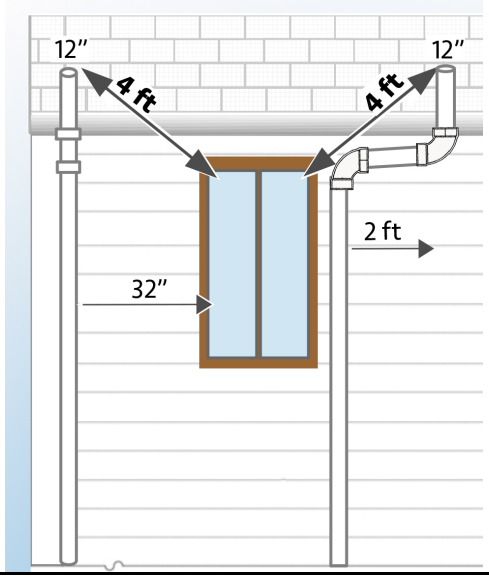

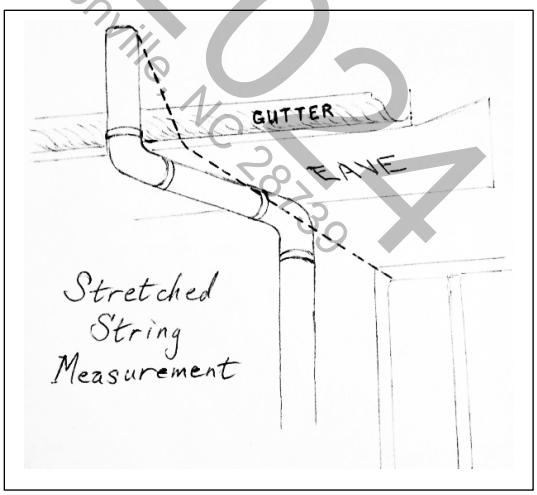

6.4.12 *Horizontal trajectory*

6.4.12.1 90-Degree Horizontal Discharges

BACK

Informative advisory—Exhausts at a 90-degree angle are prone to form icicles during freezing weather that can fall to cause harm to property or individuals.

6.4.14 *Protection from the elements*

BACK

6.4.14.1 **Installation of an ASD system should include efforts to:**

a) Provide support directly below fan locations and the discharge location. For example, a physical support should be provided within 3 feet (91 cm) of the point of exhaust or within 18 inches (46 cm) above and below fans located in attics and when pipe might otherwise allow lateral or vertical movement of piping;

b) Locate or configure the exhaust assembly in a manner that avoids blockage or damage to the exhaust piping as a result of snow, ice curl or other forces; and

c) Secure and meet code requirements for any piping that extends high enough to require tethering or other means of lateral stability.

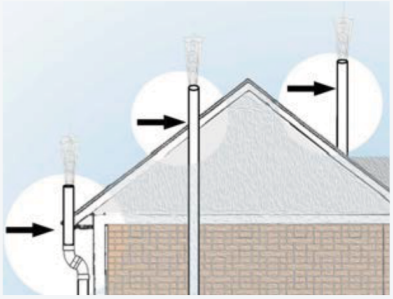

6.4.14.2 **Icing**

The exhaust should be designed and installed to minimize significant airflow blockages from ice.

6.4.14.3 **Rain and Debris**

In locations that experience blockage from debris or pervasive torrential rain or high winds each season, rain caps may sometimes be warranted. For concerns of debris or small animals that may enter the piping, the best choice is usually wire mesh described in Section 6.4.14.4. For torrential rain, a better choice is often a rain diverter as shown in this the diagram.

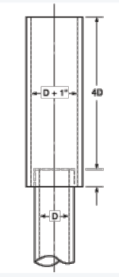

6.4.14.4 **Wire Mesh or Equivalent**

Rodent/insect screen (mesh not smaller than 1/2 in. [13 mm]) is permitted and recommended where the contractor or client is concerned that debris or small animals might enter the point of exhaust, or that fan blades might cause injury to occupants. The resulting configuration required by Section 7.3.5 would not substantially diminish whole-system air volume capacity of the ASD system.

6.5 *ASD* Fan Installation

6.5.1 *Fan design*

BACK

Note 1—Choosing a fan designed to minimize objectionable noise is also an important consideration.

Note 2—Fan models that are listed by the manufacturer as having ASD as one of their intended uses can aid in confidence when choosing products designed for ASD mitigation.

7.2 Sealant Materials

BACK

Informative advisory—The chances of adverse effects on occupants from exposure to curing compounds are likely to increase with increased volumes of product application. It is recommended to use products that emit low volumes of chemical vapors for protection all occupants and prospective occupants. It is recommended to leave notices for occupants about related hazards, such as illustrated in Exhibit A.

7.2.6 *Vapor Intrusion sealants*

BACK

Note—Curing compounds, including constituent chemicals identified for mitigation that have not stabilized to a benign or minimal state, can corrupt post-mitigation chemical vapor intrusion tests.

7.3 Accessible Slab Cracks

BACK

Note—Accessible cracks across a slab that are greater than 1/16 inch (1.6 mm) in width should also be sealed. It is also recommended to seal accessible expansion or control joints in a slab.

7.4 Other Openings to Soil

7.4.2 *Basement de-watering systems*

BACK

Informative advisory—The vacuum extension needed under a slab will often not occur if the suction point is drawing most of its air from nearby openings in the slab. The suction point location compared to nearby openings in a slab must be considered for achieving mitigation system goals. Consistent with this concern, it is best to close any exposed block wall foundation openings that are above the floor adjacent to a depressurized de-watering system.

7.5 Sumps and Pits

7.5.1.1 Sump Pit Access

BACK

Informative advisory—It is recommended that sump covers are designed to allow visual access to permit observations of conditions in the sump by way of a lid window, transparent lid, or similar method.

7.6 Membranes Over Exposed Soil

7.6.6 *Surface water relief*

BACK

Informative advisory—When observing indications that water is likely to collect on the surface of a membrane, it is best to inform the client of observations, and to include any maintenance recommendations in OM&M documentation. Recommended solutions to consider include installing drainage for surface water in the lowest location in accordance with guidance in Section 7.8.1.

7.7 Sub-Membrane Depressurization (SMD)

7.7.2 *SMD—Pipe penetrations*

BACK

Note—Gasket fittings, pipe clamps, roof flashing or an appropriate sealant are commonly used to close openings around pipe penetrations.

7.7.4 *SMD—Sealing the membrane perimeter*

BACK

Note—The larger the area addressed by sub-membrane depressurization, the greater the effectiveness of soil gas control while minimizing adverse effects of energy penalties and moisture within the crawl space.

7.7.4 Exception

BACK

Informative advisory—Designs that leave portions of the membrane open do not resist soil gas movement between the soil and air above the membrane. Such designs inevitably combine sub-membrane depressurization (SMD) with crawl space depressurization (CSD) or soil gas dilution.

7.8 Drains

7.8.1 *Drains to soil*

BACK

Informative advisory—Where a drain represents an opening between soil gas and living spaces or outside air, considerations include radon entry or loss of PFE. Where either poses concern, it is recommended that a one-way flow drain or equivalent method with adequate water flow capacity be installed. This can be applicable for any drain that discharges directly into the soil beneath the slab or membrane, through solid pipe to a dry well, or other drainage pathway that is open to the soil.

Considerations to weigh regarding use of one-way flow valves include: (1) potential for debris to clog the valves and designed capacity of the valve to drain adequate volumes of water, and (2) whether the airflow leaks between soil and indoor air could defeat efforts to establish PFE or contribute to backdraft of atmospherically vented combustion appliances.

7.8.3 *Drains to daylight*

BACK

Informative advisory—A one-way flow valve or other mechanical means should be installed when a mitigation system is designed to draw soil gas from drain tiles or (internal or external) that discharge water to daylight. This prevents outside air from entering the ASD system while allowing an unobstructed flow of drain water to drain out of the water control system.

7.9 Sealed Isolation Assemblies

BACK

Note—*Sealed isolation assemblies* are often employed to help break the connection between soil air and living spaces to isolate an airspace for depressurization or pressurization. A *sealed isolation assembly* might be the entire building shell; an isolated airspace such as a crawl space or a false floor, wall, or ceiling; or other room below or adjacent to occupied spaces. Sealing can include gaskets on hatches or doors; sealed partition walls, floors, or ceilings; and other configurations that resist air migration across a partition or any component of the isolation assembly.

8.0 FOR ALL SYSTEMS AND METHODS

8.2 System Monitors

8.2.2 *Active notification monitors*

BACK

Note—Sensors that trigger active notification are typically air pressure sensors, airflow sensors or circuits that detect electrical flow. Each method has its strengths and weaknesses. Product features that deserve strong considerations include:

a) Lasting service: For example, products that expose electrical or sensitive components to humid airflow within ASD piping can be prone to premature failure;
b) False notifications: Examples are temporary or seasonal conditions that can result in power outages, low pressure, or low airflow. Delayed notification in terms of hours or days is an example of methods that circumvent false notifications; and
c) Use restrictions: Monitors that can reliably detect fan failure for ASD systems that inherently generate weak pressure or airflow.

8.3 Electrical

BACK

Safety guidance garnished from NFPA 70 2020 (The National Electric Code® as published by NFPA)

All electrical wiring and electrical components are to be supported and firmly secured in place. Installed cables and conductors exposed on the surfaces of ceilings and sidewalls are to be supported by the building structure such that cables and conductors will not be damaged by normal building use. In locations where electrical components are likely to be exposed to physical damage, enclosures or guards are to be so arranged and of such strength as to prevent such damage.

Where encountering fans, equipment, or exposed wiring operating at 50 volts or more that are located outdoors and energized by an exterior plugged receptacle outlet connection, the wiring configuration for these components would normally require modification or GFCI protection.

8.4 Labeling

8.4.4 *Label duct piping*

BACK

Note—For ASD systems, duct piping labels should be affixed at intervals not greater than 10 feet (3 m) along the developed length of piping.

8.4.5 *Label electrical disconnects*

BACK

Note—Best practice would include that circuit breaker(s) protecting the mitigation system fan circuit(s) would also be labeled with the text such as "Radon Fan" or "Soil Gas Fan."

8.5 Inspection for Compliance

8.5.2 *Review with clients*

BACK

Informative advisory—After installation(s), it is recommended that the contractor provide an educational review of the mitigation system(s) to the client. The review should include operating principles of the system(s), operation, and maintenance of the systems(s) and all other components of the plan for OM&M.

8.6 Retention of Records

BACK

Informative advisory—Health and safety records should be maintained for a minimum of 20 years.

9.0 POST-MITIGATION

9.1 Functional Evaluations

9.1.3 *ASD systems*

9.1.3. a Depressurization Performance

BACK

Note—Choices for actions based on results of this pressure measurement, which may include further investigations, are at the discretion of the system designer.

9.1.4 *Vapor intrusion and ASD*

BACK

Note—Other evidence pertinent to validating system performance relative to effective mitigation of chemical vapor intrusion can include peer reviewed methods for evaluating performance, where deemed necessary or acceptable.

9.2 Radon Test After Mitigation

9.2.4 *Contractor obligations (Single family homes)*

9.2.4.1 Exception:

BACK

Informative advisory—The contractor should also instruct the independent laboratory to forward a copy of the test results to the contractor for retention in the contractor's records.

11.2 Safety Training

BACK

Informative advisory—Confirmation of jobsite worker knowledge of the safety management program should be logged in QC records with the jobsite worker's signature and date after each educational or briefing event.

11.3 Hazardous Building Conditions

11.3.3 *Flue Gas Spillage*

BACK

Informative advisory—Altering air pressure in a building, intentionally or unintentionally, may cause flue gas spillage. A potentially serious unintentional air pressure alteration occurs for ASD when the volume of air needed to achieve mitigation goals is mostly coming from a relatively small, confined airspace that contains an atmospherically-vented combustion device.

Informative advisory—Because a spot check for backdraft cannot determine the true potential for backdraft under different building operating conditions, such as at night or in different seasons, it is recommended that a carbon monoxide sensor be installed to alert occupants to flue gas spillage.

11.5 Chemical Vapor Mitigation

11.5.1 *Chemical vapor Intrusion (VI)*

BACK

Informative advisory—Confirmation of jobsite worker knowledge of the safety plan should be logged in QC records with the jobsite worker's signature and date after each educational or briefing event.

SGM-SF 2023

AARST CONSORTIUM

Vapor Intrusion Companion Guidance

Note—Guidance provided herein was compiled by the SGM-SF consensus body committee members in 2017. Though editorially reorganized, work to refine this guidance is expected for future publications.

Advisory—The information contained in this guidance document is not part of this ANSI/AARST American National Standard (ANS) and does not contain requirements necessary for conformance to the SGM-SF standard. The information contained in this guidance document has not been processed in accordance with ANSI's requirements for an ANS. As such, this guidance document may contain material that has not been subjected to public review or a consensus process.

Section A Understanding Chemical Exposure Concerns

A-1.1 *Health Risks*

The risk of adverse health effects from exposure to a toxic chemical or substance depends on the nature, frequency, and duration of exposure to the chemical(s). Variables for the nature of the exposure include:

a) the concentrations of chemicals present;

b) the environmental medium in which the chemicals are present (e.g., indoor air, liquids or solid, including soil and/or groundwater); and

c) the route of exposure:

- Inhalation of vapor-phase contaminants or particulate matter containing sorbed contaminants (or hazardous building material particulates) that result in absorption of contaminants or adverse effects in the respiratory system. Note that some chemicals are more toxic via inhalation compared to other routes of exposure because chemicals that are absorbed from the respiratory system are not passed through the liver first where some degree of detoxification can otherwise occur.
- Dermal contact resulting in absorption of contaminants through the skin
- Ingestion resulting from hand-to-mouth actions following dermal contact
- Ingestion of particulate matter as a result of inhalation and then swallowing of particulates

A-1.2 *Site classifications*

Formal site classifications or listings are based upon state requirements and/or information obtained by firms that have provided assessment of a site.

A-1.3 *Informational description of site classifications*

Class 3: Continuous or Chronic Risk Concerns of harmful effects from average low-level exposure (e.g., ≥ 26 years) or repeated exposure events to somewhat higher concentrations to result in a similar degree of hazardous exposure.
Class 2: Subchronic Risk Concerns of harmful effects with average exposure across 10% of a life span or repeated exposure events to higher concentrations that can result in a similar degree of hazardous average exposure.
Class 1: Acute Risk Concerns of harmful effects from immediate or short-term exposure (e.g., < 30 days).
Rapid Response Situations with immediate concern when estimated exposure concentrations exceed health-protective concentrations for short-term or acute exposure.

A-1.4 *Partial list of chemicals commonly associated with contaminated soil*

Advisory Note 1 Lists provided herein are intended to shed light on some of the more common contaminants found at contaminated residential sites.	
Arsenic	naturally occurring; industrial discharges
Cadmium	
Hexavalent chromium	
Mercury	
Lead	naturally occurring; industrial discharges; older paint residues
Polynuclear aromatic hydrocarbons (PAHs)	products of combustion (such as creosote, soot); petroleum constituents (diesel fuel, fuel oils)

A-1.5 *Partial list of chemicals commonly associated with contaminated indoor air (and potential sources)*[1]

Advisory Note 2 There are many thousands of contaminants in commerce and others that occur naturally. Compiling a definitive list that might be encountered at a contaminated property is not feasible.	
Benzene	(Collectively known as BTEX; gasoline, diesel fuel, #2 fuel oil)
Toluene	
Ethylbenzene	
Xylenes	
Carbon tetrachloride	(tetrachloromethane; chemical releases from cleaning fluids or other industrial discharges)
Tetrachloroethylene	(perchloroethylene, or PCE; chemical releases at dry cleaning facilities; other industrial discharges)
Trichloroethylene	(TCE; degradate of PCE; other industrial discharges)
cis-1,2-Dichloroethylene	(cis-1,2-DCE; degradate of TCE; other industrial discharges)
trans-1,2-Dichloroethylene	(trans-1,2-DCE; degradate of TCE; other industrial discharges)
Vinyl chloride	(VC; degradate of cis-1,2-DCE and trans-1,2-DCE; other industrial discharges)

Section B Guidance for Teams

B-1.1 *Roles and responsibilities*

Efforts to reduce occupant exposures to hazardous soil gas often begin with decisions made by persons responsible for possible vapor intrusions into a property. This Responsible Party (RP) can be the property owner(s) or extend to include private businesses and/or governmental agencies.

Commissioning

When achieving an objective requires persons qualified in varied disciplines with different skill sets, a commissioning process first engages identification of roles and responsibilities of an Overseeing Team. The overseeing team will normally include:

a) The Responsible Parties;
b) Regulatory Authorities when compliance with local, state or federal regulatory standards is required; and
c) An Overseeing Professional to assemble and coordinate a qualified team of professionals of diverse skill sets.
   Qualified contracting or management teams for vapor intrusion normally include at least one qualified Environmental Consultant (EC).

Soil Gas Mitigation

Design, implementation, and stewardship of techniques to reduce soil gas entry require technical knowledge and skills specific to:

a) fluid mechanics of building air pressure and its dynamic interaction with distribution and entry of both soil gas and outdoor air; and
b) building construction practices.

[1] States or local jurisdictions often publish more complete guidance and jurisdictional requirements.

For further information, see the U.S. Environmental Protection Agency (EPA). 2015a. Vapor Intrusion Screening Level (VISL) Calculator, User's Guide at: www.epa.gov/oswer/vaporintrusion/guidance.html

For worker health guidance, see: The NIOSH pocket guide to chemical hazards: www.cdc.gov/niosh/npg/

Table B-1.1 Example Commissioning Structure for Team Interactions

Activity	Deliverable	
Initiate Project	**Document Roles and Responsibilities**	Commissioning Team
This event is a decision of property owner(s) in coordination with health departments and/or the commissioning team.	*Owner and overseeing parties.* *The need for a Qualified Soil Gas Mitigation Professional should be identified at this time.*	
Decide Project Requirements	**Document Owner's Project Requirements**	
Normally includes short-term and long-term health protection and, if applicable, site cleanup.	*All goals and specific details*	
Develop Commissioning Process	**Documented Commissioning Process**	
General site plan	*Oversight process*	
Set Contractor Requirements	**Documented Specifications**	Includes Qualified Soil Gas Mitigation Professional
As applied to staff and subcontractors	*Minimum education, credentials, etc.*	
Design Approach to Requirements	**Documented Basis of Design**	
Overseeing parties should include a Qualified Soil Gas Mitigation Professional during this phase.	*Rationale*	
Review Design to Requirements	**Design Review Report**	
Installation details compared to goals.	*Conclusion of review*	
Review Submittals	**Submittal Review Report**	
Overseers	*Overseers*	
Observe and Test	**Construction Checklists and Reports**	
1) Site assessment, 2) Building diagnostics, and 3) Post-installation test	*1) Site assessment, 2) Building diagnostics, and 3) Post-installation test*	
Resolve Issues	**Issues and Resolution Log**	
As needed	*Document as needed*	
Assemble Systems Manual	**Systems Manual**	
OM&M Plan	*Completed OM&M Plan*	
Conduct Training	**Training Plans and Records**	Commissioning Team
For long-term staff and OM&M personel	*Document training and establish retention of logs*	
Post-occupancy Operation	**End of Warranty Commissioning Report**	
First year or two testing to establish baseline for effectiveness.	*As established for each contractor and, if applicable, if decommissioning the installation.*	
Assemble Commissioning Report	**Deliver Report**	
Overseers	*Overseers*	

B-1.2 *Mitigator needs*

When commissioning goals include reduction of soil gas entry, needs of mitigation professionals include:

a) A specific Scope of Work;
b) Overall remediation goals with current strategy and rationale for design and objectives;
c) Known Hazards for each building being mitigated to include, among others:
   - chemical(s) of concern, regulatory action levels for site classification and toxicology standards.
   - a determination for any need, or if there is not a need, for special considerations during removal, handling and control of hazardous substances;
d) Information needed to achieve appropriate system design and implementation.
e) Quantifiable Goals and Objectives, including the extent of reductions for soil gas entry needed to achieve mitigation goals; and
f) Project Management Specifications, such as contractor qualification requirements, deliverable and reporting schedules, and payment terms.

B-1.3 *Communication plan*

A written plan should be developed in coordination with the overseeing team (i.e., senior staff, RP, oversight staff and communications staff) for communicating throughout the process to all affected parties. As appropriate, regulatory authorities and owners of affected properties that are not owner-occupied residences should participate in developing the plan. Recommended components include:

a) Specify which management staff member is responsible for onsite activities.
b) Specify the structure of additional communication paths between senior staff, facilitating staff, maintenance staff, measurement service provider(s) and the qualified soil gas mitigation professional.
c) Identify and provide contact information for those individuals who are authorized to respond to inquiries from owners, occupants, and the public.
d) Develop notices (with instructions, general information, and information on whom to contact for inquiries) that may be specific for each affected audience, including:
   1. facilitating staff that might normally include oversight staff, building managers, maintenance managers and other supervisors.
   2. occupants of the building.
e) Develop timetables and means for distribution of notices.

B-1.4 *Guidance to mitigators regarding proposals*.

In addition to proposal requirements in SGM-SF Section 4.2:

a) If not already provided in a Request for Proposal received, the contractor should request of the client information as to whether the site is listed as classified by the state or other jurisdiction;
b) The contractor should include any additional limits the contractor places on the stated scope of work relative to degree of participation in an operations, maintenance, and monitoring plan (OM&M) and any handling and control of hazardous substances.

Note—It is customary practice that contractors limit their scope of work and transfer certain obligations in writing to the client or Responsible Party. Common examples include significant or incidental handling, capture, disposal and management of contaminated substances such as contaminated soil, groundwater, condensate, and vapor that exceed regulatory limits.

Table B-1.2 Content Mitigators Often Need In "Requests for Proposals" (RFP)

1.0 RFP Universal Provisions

1.1 Project Overview

1.1.1 Project Summary

1.1.2 Chemical Information—*Chemical of concern, sub-slab levels, IA levels, regulatory levels for site classification, mobile lab site characterization, toxicology standards, pathway, and source identification*

1.1.3 Quantifiable Goals and Objectives—*What is the measure of success? (i.e. verified pressure differential, IA level reduction, specific mitigation area)*

1.1.4 Project Schedule—*Specific deliverable dates for each phase of the project*

1.1.5 Additional Information—*Bid schedule, site access, consultant POC, other concurrent remedial actions*

1.1.6 Progress Reporting, Final Reporting—*Pilot testing, system design, system as-built, post-mitigation verification testing, photos, drawings, component specs sheets, MSDS info*

1.1.7 Additional Project Requirements—*Onsite supervision, meetings, risk communication, RP communication*

1.1.8 Payment, Submittals—*Phase definition, budget deliverables (i.e. fixed price, performance contract), payment terms and conditions, schedule of values and mobilization*

1.2 Contractor Requirements

1.2.1 Insurance—*Minimum requirements*

1.2.2 Health and Safety—*OSHA, HAZWOPER, health, and safety program (to include hazardous communication program), site-specific health and safety program*

1.2.3 Additional Contractor Requirements—*Responsible parties*

1.3 Appendices

1.3.1 Sampling Data, Boring Logs

1.3.2 Previous Pilot Testing Data

1.3.3 Site Map, Drawings

2.0 RFP for Mitigation Design

2.1 Universal Provisions *(All components of 1.0)*

2.2 Mitigation Standards, Regulatory Requirements—*Applicable ANSI standard, applicable regulatory requirements*

2.3 Pilot Testing, Building Characterization—*Deliverables, such as PFE, vacuum and airflow testing, HVAC assessment*

2.4 Power consumption analysis

2.5 Analog or digital controls, onsite or remote monitoring

3.0 RFP for Mitigation Installation

3.1 Universal Provisions *(All components of 1.0)*

3.2 System Design Specs and Additional Specs—*Permitting, material characterization, soil testing and disposal specs, post-mitigation verification criteria, QC and startup procedures, decontamination, and containment specs*

3.3 Warranty—*Performance, system components, roof bonding, length of warranty*

4.0 RFP for Operation and Maintenance

4.1 Universal Provisions (All components of 1.0)

4.2 Summary of logistical aspects for this work *(e.g., inspection/maintenance frequency and deliverable dates)*

4.3 System maintenance procedures *(e.g., analog or digital controls, onsite or remote monitoring, PFE, system tuning)*

4.4 Inspection reporting and maintenance logs

4.5 General Pricing Estimate Examples:

4.5.1 Mobilization (Crew Travel) $ _____

4.5.2 Mobilization (Single staff member) $ _____

4.5.3 Additional Suction Location (per) $ _____

4.5.4 Vapor retarder materials $ _____

Section C Monitoring Events and Stewardship (2017)

Guidance provided herein was compiled by the SGM-SF consensus body committee members in 2017. Though editorially reorganized, work to refine this guidance is expected for future publications.

Considerations included that once baselines are established, ongoing monitoring and stewardship activities can be better defined.

Table C-1 2017 Guidance: Post-mitigation Monitoring Events for Chemical Vapor Intrusion

		Rapid Response indicated if estimated exposure exceeds health protective concentration for short-term or acute exposure	
No prior assessment	**Class 3** **Continuous or Chronic Risk**	**Class 2** **Subchronic Risk**	**Class 1** **Acute Risk**
If suspected concerns exist, ***Preemptive mitigation*** may be warranted.	Concerns of harmful effects from average low-level exposure across many years (e.g., ≥ 26 years) or repeated exposure events to somewhat higher concentrations	Concerns of harmful effects from average exposure across 10% of a life span or repeated exposure events to higher concentrations	Concerns of harmful effects from immediate or short-term exposure (e.g., < 30 days)
	Initial Post-mitigation Monitoring Events		
For Preemptive mitigation: Initial PFE and system pressure measurements. Indoor air measurements recommended but not required	Initial Frequency for a minimum of 1 year: Seasonally until a baseline is established that indicates successful effectiveness.	Initial Frequency for a minimum of 1 year: Seasonally (or more frequently) until a baseline is established that indicates successful effectiveness.	Initial Frequency for a minimum of 2 years: Seasonally (or more frequently) until a baseline is established that indicates successful effectiveness.
	Each monitoring event includes measurements of indoor air (contracted by responsible party) and measurements of PFE, system pressure and review for fan and mechanical systems.		
	Note: Longer durations or more frequent monitoring may be warranted dependent upon: a) the degree to which measured concentrations exceed the action level, or b) the degree of observed variability above the action level especially post-mitigation. Note: Radon testing is recommended pre-mitigation. Include in all initial monitoring events If concentrations found can aid evaluations of system effectiveness and confirm a health benefit.		
	Monitoring Events Thereafter Every year: Mechanical inspection (PFE, system pressure and mechanical systems.) Every 2 years: Indoor air measurements Increase frequency of monitoring events based on observed variability or evidence of plume movement.		
	In addition, concentrations should be retested if changes occur for the building structure, HVAC, openings to soil, or if earthquakes, construction blasting, fracking, or formation of sink holes nearby.		
	Cessation of biennial indoor air measurements: Biennial Indoor air measurements can be replaced with 5-year test cycles only for those buildings where: a) Systems have shown continued effectiveness; and b) The mitigation systems are operated under a written operation and maintenance (O&M) plan that includes regular monitoring of mechanical equipment and requires a professional's signature verifying that systems continue to function in the same manner as the last test.		

C-1 Initial Post-mitigation Testing

Each post-*mitigation* monitoring event should include: (1) measurement of indoor air; (2) *PFE* measurements; (3) system pressure measurements; and (4) review of fan and mechanical systems.

To provide an initial measure of mitigation effectiveness, the first post-mitigation monitoring event should be conducted no sooner than 2 weeks after mitigation unless specified differently by a regulatory authority (e.g., when acute risks are present). The 2-week delay period is warranted for reducing influences on indoor test results due to chemicals that may have adsorbed into building materials and finishings. This also allows chemical vapors and gasses to reach a state of equilibrium with indoor air that is more representative of future expectations when mitigation systems are active.

For acute risk situations, more frequent or multiple monitoring events should be considered prior to or in concurrence with seasonal post-mitigation monitoring.

C-1.1 *Initial seasonal verification*

To account for seasonal variations, monitoring events sufficient to evaluate effectiveness under each of the following conditions should, at a minimum, be considered:

a) Heating Season Conditions.
This is when the highest outdoor air temperatures are at least 10˚ F colder than indoor air—e.g., when outdoor temperatures are less than 65˚ F (18˚ C).

If seeking to help characterize temporary worst-case pressure-driven entry of soil gas and stressed mitigation system conditions, at least one monitoring event should be conducted when outdoor temperatures are within 10˚ F (5˚ C) or colder than the average for coldest local temperatures;

b) Cooling Season Conditions.
This is when outdoor air temperatures are at least 10˚ F warmer than indoor air for a significant portion of the daytime—e.g., when daytime outdoor temperatures are more than 85˚ F (29˚ C).

This monitoring event helps evaluate if consistent activity of HVAC blowers temporarily enhance soil gas entry across this season; and

c) Mild Weather Conditions.
This is when the outdoor temperatures are similar to indoor temperatures of about 74˚ F (23˚ C).

This monitoring event helps evaluate if HVAC blowers temporarily inhibit soil gas entry during other seasons.

C.1.2 An additional monitoring event should be considered to evaluate effectiveness under other concerning condition(s) that can include:

a) During Low Water Table (dry soil conditions)
This monitoring event helps characterize if soil gas entry is temporarily enhanced due to a larger than normal volume of soil gas under a building.

b) During High Water Table (wet soil conditions)
Note that soil gas entry is typically inhibited during high water table conditions. However, other considerations may warrant this testing, such as when hazardous substances in liquid or aqueous form that are highly concentrated and reside in close proximity to the building.

C-1.3 *Seasonal Evaluations*

Any one of these seasonal conditions can result in enhancement or virtual cessation of soil gas entry for temporary or seasonal durations, depending upon building characteristics and mechanical systems.

It is recommended to continue seasonal monitoring events until a baseline is established for yearlong effectiveness. Restarting the regimen of seasonal monitoring events is recommended if system alterations are found to be warranted for improving system effectiveness. A longer duration or more frequent monitoring may be warranted dependent upon:

a) the degree to which measured concentrations exceed the action level, or

b) the degree of observed variability above the action level, especially post-mitigation.

C-1.3.1 Use of Seasonal Information

Information gained by the initial seasonal monitoring events can be used to guide protective stewardship choices for subsequent monitoring events by identifying conditions that represent average or worst-case conditions. If radon testing was included in seasonal monitoring and indicated consistency with other soil gas entry, inexpensive radon testing, if deemed acceptable, can sometimes suffice for future monitoring events.

C-2 Soil Gas Measurements

Soil gas measurements are often conducted in association with the initial site characterization. Soil gas measurements under the building and within ASD duct piping can be compared with measurements taken during initial ASD commissioning to help characterize evidence of a shifting or depleted source. Soil gas measurements within ASD duct piping are also employed to evaluate regulatory compliance with limits on discharged hazardous vapors.

Monitoring for changes of soil gas concentrations within duct piping is one procedure employed for chemical vapor intrusions sites when there is reason to believe that the system might eventually not be needed. However, check with your state regulatory agency for conditions that would fully warrant possible decommissioning.

C-3 Indoor Air Testing

To reproducibly account for testing variables such as natural day-to-night variability in soil gas entry and dilution after entry, it is recommended to:

a) Conduct short-term indoor air measurements under closed-building conditions for durations that should be no less than about 2 days;
b) Conduct at least one measurement in the lowest occupiable location within the home for use as the most reproducible measurement when evaluating seasonal measurement differences;
c) Follow appropriate guidance for sampling and laboratory analysis, such as EPA TO-15 and TO-17[2];
d) Conduct measurements of ambient outside air sufficient to characterize the influence of ambient concentrations on indoor measurement results; and
e) Take care to reduce influences on test results such as chemicals contained in household cleaning products.

C-3.1 *Discussion: Surrogate post-mitigation testing methods*

Surrogate methods to monitor continued effectiveness of mitigation are commonly employed in lieu of an ardent regimen of indoor testing. PFE testing is the most common example. Indoor measurements of soil gases other than the chemical(s) of concern can also be an effective supplement.

Radon is also well suited for evaluating continued reduction of soil gas entry. Testing for radon before and after mitigation can establish a baseline for surrogate correlation by comparing results with other indoor measurements.

Naturally occurring radon is found everywhere on earth regardless of what survey maps might suggest. Initial indoor measurements as low as 2.5 pCi/L are common anywhere and can provide evidence for a difference between pre- and post-mitigation. Concentrations of 4 pCi/L or greater are even more helpful for estimating percentages of reduced soil gas entry and evidence of enhanced benefits to occupants.

C-3.2 *Reproducible testing*

When possible, testing should be made under reproducible conditions

[2] EPA/600/4-90/010 1990 Compendium of Methods for the Determination of Air Pollutants in Indoor Air, and EPA/625/R-96/01b 1999 Compendium of Methods for the Determination of Toxic Organic Compounds in Ambient Air - Second Addition

Sample of closed-building protocol essentials

SAMPLE DOOR HANGER NOTICE

AIR TEST IN PROGRESS

Required closed-building conditions
(12 hours prior the test and during the test).

Keep closed	**Windows & Exterior doors** *(except for momentary use)*
Set to normal	**Heating & Cooling systems** *(kept between about 65˚ - 80˚ F)*
Operate normally	**Bathroom fans**
	Other ventilation units that are used in all seasons
Avoid excessive operation	**Exhaust systems** such as from laundries or for control of fumes from community kitchens
Outside air dampers closed	**Window air conditioners and unit ventilators**
Do not operate	**Window fans, whole building fans or other** systems that temporarily bring air into or out of the building for seasonal energy savings or comfort
	Fireplaces that burn solid, liquid or gas fuels, unless they are the primary sources of heat for the building

Sample of chemical product guidance

SAMPLE DOOR HANGER NOTICE

AIR TEST IN PROGRESS

48-72 hours prior the test and during the test

Do not use	**Pesticides, glues, sealants, paints, thinners or varnishes**
	Cleaning compounds for bathrooms, appliances, furniture, floors, and other all-purpose cleaning products.
	Bleach, disinfectants, air fresheners or odor eliminators
	Cosmetics such as hair spray, nail polish remover, nail polish and perfume.
Do not	**Smoke in the house**
	Operate or store automobiles in an attached garage
	Store swimming pool products in the house or attached garage
	Store gasoline, oil, brake fluid, lubricants or solvents in the house or attached garage

For details see householdproducts.nlm.nih.gov

C-4 Ongoing stewardship

C-3.1 *Mechanical Systems*

It is recommended that inspection be conducted yearly for mechanical operations and system integrity, to include PFE and system pressure measurements and related mechanical systems and components.

C-4.2 *Indoor Air Measurements*

It is recommended that the monitoring events include measurements of indoor air at least every 2 years.

C-4.3 *Cessation of Biennial Indoor Air Measurements*

It is recommended that biennial retests for mitigated buildings be maintained for as many years as the system is operational unless replaced with 5-year test cycles for only those buildings where:

a) systems have shown continued effectiveness to the satisfaction of jurisdictional authorities; and

b) the mitigation systems are operated under a written operation and maintenance (O&M) plan that includes regular monitoring of mechanical equipment and requires a professional's signature verifying that systems continue to function in the same manner as the last test.

C-4.4 *Additional Monitoring Events*

Informative advisory—It is recommended to conduct additional monitoring events:

a) based on observed variability or evidence of plume movement; and

b) if any of the following circumstances occur:

- ✓ a new addition is constructed or alterations for building reconfiguration or rehabilitation occur;
- ✓ heating or cooling systems are altered with changes to air distribution or pressure relationships;
- ✓ ventilation is altered by extensive weatherization, changes to mechanical systems or comparable procedures;
- ✓ sizable openings to soil occur due to:
  - — groundwater or slab surface water control systems are added or altered (e.g., sumps, drain tiles, shower/tub retrofits, etc.); or
  - — natural settlement causing major cracks to develop;
- ✓ earthquakes, construction blasting or formation of sink holes nearby; or
- ✓ an installed mitigation system is altered or repaired.

C-5 Decommissioning systems

In certain instances, the source of hazardous soil gas can be found to have migrated away from a building or found to be depleted in hazardous concentrations, either naturally or as a result of remediation and related efforts. In such circumstances, considerations can include discontinued operation of soil gas mitigation systems and ongoing stewardship.

C-5.1 *Decommission Decisions*

Decisions to decommission a system due to evidence of a shifting or depleted source are beyond the scope of this document but normally include documented measurements of soil gas from under the building with the system inactive for an adequate period of time prior to the measurement. A test for radon gas should also be conducted at this time to inform the property owner if there are other reasons to warrant continued system operation.

C-5.2 *Advise Property Owner*

It is recommended to advise the owner that a resident can continue his/her own testing for continued verification

Section D Design Installation Guidance/Advisories

SGM-SF	Discussion/Advisories
1.0 Scope 1.2.3 *Combustible gas*	Complete details on system design for mitigating the hazards of flammable gas are beyond the scope of SGM-SF. See discussion below (6.5) regarding explosion proof fans flammable substances.
5.0 System Design 5.1.3 *Permanent systems required*	There are limits on temporary solutions. Section 13.2 in ANSI/AARST SGM-MFLB provides requirements and guidance relative to use and duration for temporary and rapid response mitigations systems or methods.
5.2 Nondestructive Investigation	Ground Water Control Contaminated water from below ground can be an ongoing hazard. Where grading, roof downspouts or failed sump pumps do not flow rainwater or groundwater away from a building, the tremendous weight of water collecting in the soil will drive water below grade to forcefully intrude into a structure. Where observed, an experienced ground water control specialist should be contracted or consulted when ground water control is needed.
5.3 Diagnostic investigation	Pressure field extension (PFE) analysis is required for VI systems and includes that test ports be provided for future verification of PFE.
6.0 ASD Systems 6.2.7 *Secure duct piping*	Greater care is needed to help prevent water from escaping the piping. Durability of pipe joint configurations is important to prevent condensed chemical compounds from escaping the pipe within a home.
6.4 ASD Exhaust Discharge	Approved processes and designs associated with federal, state, or local requirements when exhausting potent vapor concentrations are beyond the scope of SGM-SF.
7.0 Sealing Sealant material and Soil gas retarder materials	Considerations are required regarding chemicals of concern include: 1) slow curing of compounds in sealants that might interfere with measurements of indoor concentrations, and 2) soil gas retarders that resist degradation because of chemicals in the soil.
8.2 System Monitors	Enhanced fan monitor choices can sometimes be warranted, and labels require for appropriate verbiage.

11.0 Health and Safety **11.5 Chemical Vapor Mitigation** 11.5.3.1 Jobsite Hazards	Seeking responses to mitigator inquiries about chemical hazards is important. Responsibility is inherently owned by the mitigation professional for safe practices during work.
	Handing contaminated soil and liquids can be hazardous. Approved processes for handling and disposing of contaminated soil are beyond the scope of SGM-SF
6.5 ASD Fan Installation 6.5.1 *Fan design* d) 3	Fan choices and spark resistance features must comply with the National Electric Code (NEC) where flammable gases or vapors are present in quantities sufficient to produce explosive or ignitable mixtures. It is extremely important to limit the concentration of chemicals in the airstream of an Active Soil Depressurization to well below the Lower Explosion Limit (LEL) for that gas. Failure to maintain gas concentrations below 10% of LEL could result in a fire, explosion, and serious injury.

Examples of Explosion Proof Fan Classifications

Class	Definitions
Class I	Locations: Are those in which flammable gases or vapors are or may be present in the air in quantities sufficient to produce explosive or ignitable mixtures.
Class II	Locations: Are those which are hazardous due to the presence of combustible dust.
Class III	Locations: Are those which are hazardous due to the presence of easily ignitable fibers or flyings, but in which such fibers or flyings are not likely to be in suspension in the air in quantities to produce ignitable mixtures.
Division	
Division I	Locations in which hazardous concentrations in the air exist continuously, intermittently, or periodically under normal operating conditions.
Division II	Locations in which hazardous concentrations are handled, processed, or used but are normally within closed containers or closed systems from which they can escape only in case of accidental rupture or breakdown.
Group (Class I)	
Group A	Atmospheres containing acetylene.
Group B	Atmospheres containing hydrogen, or gases (or vapors) of equivalent hazard, such as manufactured gas.
Group C	Atmospheres containing ethyl-ether vapors, ethylene or cyclo propane.
Group D	Atmospheres containing gasoline, hexane, naptha, benzine, butane, alcohol, acetone, benzol, lacquer solvent vapors, or natural gas.
Group (Class II)	
Group E	Atmospheres containing metal dust, including aluminum, magnesium and their commercial alloys and other metals of similarly hazardous characteristics.
Group F	Atmospheres containing carbon black, coal, or coke dust.
Group G	Atmospheres containing flour, starch, or grain dust.

The next pages provide Lower Explosion Limits (LEL) for certain common chemicals

Flammable / Combustible / Explosive Gases and Vapors
A reference for Lower Explosion Limits (LEL) for certain common chemicals

A reference chart of Lower Explosion Limits (LEL) Gases and Vapors	LEL in % by volume of air	NFPA Class	Flash point
Acetaldehyde	4.0	IA	-39°C
Acetic acid (glacial)	4	II	39°C to 43°C
Acetic anhydride		II	54°C
Acetone	2.6-3	IB	-17°C
Acetonitrile		IB	2°C
Acetyl chloride	7.3	IB	5°C
Acetylene	2.5		-18°C
Acrolein	2.8	IB	-26°C
Acrylonitrile	3.0	IB	0°C
Allyl chloride	2.9	IB	-32 °C
Ammonia	15	IIIB	11°C
Arsine	4.5 – 5.1	IA	Flammable gas
Benzene	1.2	IB	-11°C
1,3-Butadiene	2.0	IA	-85°C
Butane, n-Butane	1.6	IA	-60°C
n-Butyl acetate, Butyl acetate	1 – 1.7	IB	24°C
Butyl alcohol, Butanol	1	IC	29°C
n-Butanol	1.4	IC	35°C
n-Butyl chloride, 1-chlorobutane	1.8	IB	-6°C
n-Butyl mercaptan	1.4	IB	2°C
Butyl methyl ketone, 2-Hexanone	1	IC	25°C
Butylene, 1-Butylene, 1-Butene	1.98	IA	-80°C
Carbon disulfide	1.0	IB	-30°C
Carbon Monoxide	12	IA	-191°C Flammable gas
Chlorine monoxide		IA	Flammable gas
1-Chloro-1,1-difluoroethane	6.2	IA	-65°C Flammable Gas
Cyanogen	6.0 – 6.6	IA	Flammable gas
Cyclobutane	1.8	IA	- 63.9° C [11]
Cyclohexane	1.3	IB	-18°C - -20°C
Cyclohexanol	1	IIIA	68°C

A reference chart of Lower Explosion Limits (LEL) Gases and Vapors	LEL in % by volume of air	NFPA Class	Flash point
Cyclohexanone	1 – 1.1	II	43.9 – 44°C
Cyclopentane	1.5 – 2	IB	- 37 to - 38.9°C
Cyclopropane	2.4	IA	-94.4°C
Decane	0.8	II	46.1°C
Diborane	0.8	IA	-90°C Flammable gas
o-Dichlorobenzene, 1,2-Dichlorobenzene	2	IIIA	65°C
1,1-Dichloroethane	6	IB	14°C
1,2-Dichloroethane	6	IB	13°C
1,1-Dichloroethene	6.5	IA	-10°C Flammable gas
Dichlorofluoromethane			Non flammable, - 36.1°C
Dichloromethane, Methylene chloride	16		Non flammable
Dichlorosilane	4 – 4.7	IA	-28 °C
Diesel fuel	0.6	IIIA	>62°C (143°F)
Diethanolamine	2	IB	169°C
Diethylamine	1.8	IB	-23°C to – 26°C
Diethyl disulfide	1.2	II	38.9°C
Diethyl ether	1.9 – 2	IA	-45°C
Diethyl sulfide		IB	-10°C
1,1-Difluoroethane	3.7	IA	-81.1°C
1,1-Difluoroethylene	5.5		-126.1°C
Diisobutyl ketone	1		49°C
Diisopropyl ether	1	IB	-28°C
Dimethylamine	2.8	IA	Flammable gas
1,1-Dimethyl hydrazine		IB	
Dimethyl sulfide		IA	-49°C
Dimethyl sulfoxide	2.6 – 3	IIIB	88 – 95°C
1,4-Dioxane	2	IB	12°C
Epichlorohydrin	4		31°C
Ethane	3	IA	-135 °C Flammable gas

Continued A reference for Lower Explosion Limits (LEL) for certain common chemicals

A reference chart of Lower Explosion Limits (LEL) Gases and Vapors	LEL in % by volume of air	NFPA Class	Flash point
Ethanol, Ethyl Alcohol	3 – 3.3	IB	12.8°C (55°F)
2-Ethoxyethanol	3		43°C
2-Ethoxyethyl acetate	2		56°C
Ethyl acetate	2	IA	-4°C
Ethylamine	3.5	IA	-17 °C
Ethylbenzene	1.0		15-20 °C
Ethylene	2.7	IA	
Ethylene glycol	3		111°C
Ethylene oxide	3	IA	−20 °C
Ethyl Chloride	3.8	IA	−50°C
Ethyl Mercaptan		IA	
Fuel oil No.1	0.7		
Furan	2	IA	-36°C
Gasoline (100 Octane)	1.4	IB	< −40°C (−40°F)
Glycerol	3		199°C
Heptane, n-Heptane	1.05		-4°C
Hexane, n-Hexane	1.1		-22°C
Hydrogen, dihydrogen, molecular H with two protons together	4	IA	Flammable gas
Hydrogen sulfide	4.3	IA	Flammable gas
Isobutane	1.8	IA	Flammable gas
Isobutyl alcohol	2		28°C
Isophorone	1		84°C
Isopropyl alcohol, Isopropanol	2	IB	12°C
Isopropyl chloride		IA	
Kerosene Jet A-1	0.6 – 0.7	II	>38°C (100°F) as jet fuel
Lithium Hydride		IA	
2-Mercaptoethanol		IIIA	
Methane (Natural Gas)	4.4 – 5	IA	Flammable gas
Methyl acetate	3		-10°C
Methyl Alcohol, Methanol	6 – 6.7	IB	11°C
Methylamine		IA	8°C
Methyl Chloride	10.7	IA	-46 °C
Methyl ether		IA	−41 °C
Methyl ethyl ether		IA	
Methyl ethyl ketone	1.8	IB	-6°C
Methyl formate		IA	

A reference chart of Lower Explosion Limits (LEL) Gases and Vapors	LEL in % by volume of air	NFPA Class	Flash point
Methyl mercaptan	3.9	IA	-53°C
Methyl-t-Butyl Ether (MTBE)	1.6	IB	-10°C
Morpholine	1.8	IC	31 – 37.7°C
Naphthalene	0.9	IIIA	79 – 87 °C
Neohexane	1.19		−29 °C
Nickel tetracarbonyl	2		4 °C
Nitrobenzene	2	IIIA	88°C
Nitromethane	7.3		35°C
Octane	1		13°C
iso-Octane	0.79		
Pentane	1.5	IA	-40 to -49°C
n-Pentane	1.4	IA	
iso-Pentane	1.32	IA	
Perchloroethylene (PERC)	13		none
Phosphine		IA	
Propane	2.1	IA	Flammable gas
Propyl acetate	2		13°C
Propylene	2.0	IA	-108°C
Propylene Oxide	2.3	IA	
Pyridine	2		20
Silane	1.5	IA	
Styrene	1.1	IB	31 – 32.2°C
Tetrachloroethene (PCE)			none
Tetrafluoroethylene		IA	
Tetrahydrofuran	2	IB	-14°C
Toluene	1.2-1.27	IB	4.4°C
Trichloroethene (TCE)	6		none
Triethylborane			-20°C
Trimethylamine		IA	Flammable gas
Trinitrobenzene		IA	
Turpentine	0.8	IC	35°C
Vegetable oil		IIIB	327°C
Vinyl acetate	2.6		−8 °C
Vinyl chloride	3.6		
Xylenes	0.9 – 1.0	IC	27 – 32°C
m-Xylene	1.1	IC	25°C
o-Xylene		IC	17 °C
p-Xylene	1.0	IC	27.2°C